ASMB-786

LGA 1151 Intel® Xeon® E & 8th/9th Generation Core™ ATX Server Board with 4 DDR4, 7 PCIe, 6 USB 3.1, 8 SATA3, Quad/Dual LANs, IPMI

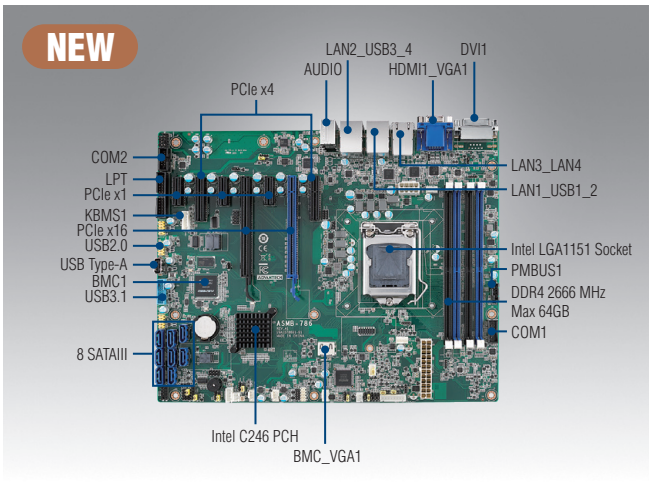

CE FCC

Features

- LGA 1151 Intel® Xeon® E & 8th/9th Generation Core™ i7/i5/i3 processors with C246 chipset
- DDR4 2666/2400/2133 MHz ECC/Non-ECC UDIMM up to 128 GB
- One Gen 3.0 PCIe x16 link (or two PCIe x16 slots with x8 link), two PCIe x4, and three PCIe x1 slots
- Triple displays - DVI-D, VGA and HDMI 2.0 ports
- Eight SATA3 ports and six USB 3.1 ports
- Rackmount optimized placement with positive air flow design
- 0 ~ 60° C ambient operating temperature range

Note: Supported OS including Windows 10 (64-bit) and Server 2016 (64-bit) have been validated.

Specifications

Form Factor		ATX form factor					
Processor System	Socket	Intel LGA 1151					
	CPU type	Intel® Xeon® E-21xx/E-22xx and 8th/9th Generation Core™ i3/i5/i7 series (TDP up to 95W)					
Core Logic	Chipset	Intel C246 chipset					
Memory	Total slots	4 (Dual Channel)					
	Max. capacity	128 GB					
	Memory type	DDR4 ECC/Non-ECC 2666/2400/2133 MHz UDIMM (288-pin)*					
	Memory size	4 GB, 8 GB, 16 GB, 32GB					
Expansion Slots	Total PCI/PCI-X/PCIe slots	7					
	Slot location 1	PCIe x1					
	Slot location 2	PCIe x4 slot (Gen3 x4 link)					
	Slot location 3	PCIe x1					
	Slot location 4	PCIe x16 slot (Gen3 x8 link)					
	Slot location 5	PCIe x1					
	Slot location 6	PCIe x16 slot (Gen3 x8 or x16 link)					
	Slot location 7	PCIe x4 slot (Gen3 x4 link)					
Graphics	Controller	Intel HD Graphics**					
	VRAM	1 GB maximum shared memory with 2 GB and above system memory installed					
Storage	SATA controller	Intel C246: 8 SATA3 6 Gb/s ports with Intel Rapid Storage Technology Enterprise support (for Windows only) (Supports software RAID 0, 1, 10 & 5)					
	SAS controller	-					
Networking	Interface	10/100/1000 Mbps					
	Controller	GbE LAN1: Intel I219; GbE LAN 2~4: Intel I210-AT					
	Connector	RJ-45 x 2 for G2 version; RJ-45 x 4 for G4 version					
Onboard I/O Connector	Printer Port connector	1					
	PSU connector	24-pin SSI power connector + 8-pin SSI 12V power connector					
	USB connector	1 USB 3.1 Gen 1 (2 ports), 3 USB 2.0 (6 ports), 1 USB Type-A					
	Fan header	5 (4-pin)					
	SMBus	1					
	Chassis intruder	1					
	Front LAN LED	2					
	Serial port header	2 (RS-232)					
	Audio connector	1 (ALC 892)					
	PS/2 KB/Mouse	1 (Optional PS/2 KB/Mouse cable and bracket required)					
Rear I/O Connector	External serial port	- (via COM cable in the package)					
	External USB port	4 (USB 3.1 Gen 2)					
	VGA port	1 (Resolution up to 1920 x 1200 @ 60 Hz)					
	DVI port	1 (Resolution up to 1920 x 1200 @ 60 Hz)					
	HDMI port	1 (Resolution up to 4096 x 2160 @ 60 Hz)					
	RJ-45	2 for G2 version; 4 for G4 version					
	Audio connector	2 (Mic-in, Line-out)					
	PS/2 KB/Mouse	-					
Watchdog Timer	Output	System reset					
	Interval	Programmable 1 ~ 255 sec					
Power Requirement	Power On	3.3 V	5 V	12 V	12V_8P	5 Vsb	-12 V
	(Xeon E-2176G 3.7GHz DDR4 2400 4G*4)	3.44A	2.61A	1.04A	6.3A	0.09A	-0.02A
Environment		Operating			Non-operating		
	Temperature	0 ~ 60° C (32 ~ 140° F) Depends on CPU speed and cooler solution			-40 ~ 85° C (-40 ~ 185° F)		
	Humidity	10 ~ 95%			10 ~ 95% (Non-condensing)		
Physical Characteristics	Dimensions	304.8 x 244 mm (12" x 9.6")					

* ECC will not be supported when paired with Core i5/i7 processors.

** Some Xeon processors have no graphic support. Please check Intel specification for processor graphics availability.

研伟科技 15323776600

Block Diagram

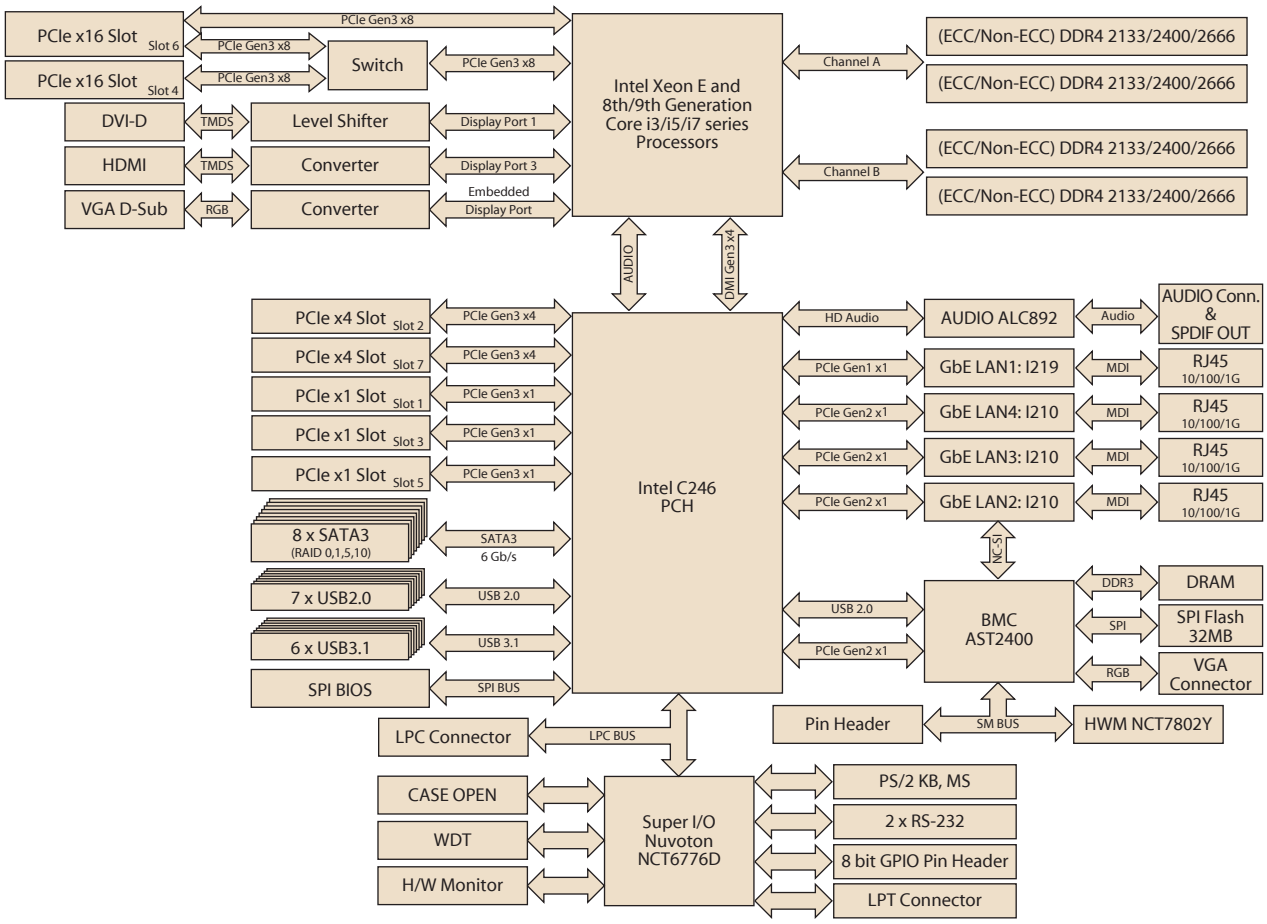

Ordering Information

Part Number	Chipset	Memory	Display	LAN	SATAIII	IPMI	MADE IN
ASMB-786G2-00A1	C246	DDR4 Non-ECC/ECC UDIMM	VGA + DVI-D + HDMI	2	8	-	China
ASMB-786G4-00A1	C246	DDR4 Non-ECC/ECC UDIMM	VGA + DVI-D + HDMI	4	8	Y	China
ASMB-786G2-00A1U	C246	DDR4 Non-ECC/ECC UDIMM	VGA + DVI-D + HDMI	2	8	-	Taiwan
ASMB-786G4-00A1U	C246	DDR4 Non-ECC/ECC UDIMM	VGA + DVI-D + HDMI	4	8	Y	Taiwan

Packing List

Part Number	Description	Quantity
2001S78610	Startup manual	x 1
1700003194	SATA data cables	x 1
1700019381	SATA data cable (right angle)	x 1
1700022749-11	SATA power cables	x 2
1700001788	COM1 cable	x 1
1960088021T001	I/O shield	x 1

I/O View

ASMB-786G4-00A1

ASMB-786G2-00A1

Optional Accessories

Part Number	Description
1960052651N021	LGA 1151/1150/1155 CPU cooler for 2U/4U and wallmount chassis
1960049408N001	LGA 1151/1150/1155 CPU heatsink for 1U chassis
1960088060T001	1U I/O shield
1700008809	Printer port cable kit (25 cm)
1700020294-01	Printer port cable kit (42 cm)
1701090401	Single port RS-232 cable with bracket (40 cm)
1700002204	Dual port USB 2.0 cable (27 cm) with bracket
1700008461	Four port USB 2.0 cable (30.5 cm) with bracket
1700020277-01	Dual port USB 3.0 cable with bracket (30 cm)
1700019268-11	Cable for onboard KBMS1 connector (35cm)
1960063434N000	Cable bracket for 1700019268-11 (4U)
1700029038-01	BMC VGA cable with bracket (35cm, for G4 SKU)
PCA-COM232-00A1E	4 ports RS-232 module to LPC connector
PCA-COM485-00A1E	4 ports RS-485 module to LPC connector
PCA-TPM-00B1E	TPM 2.0 Module by LPC

Note : Purchasing ASMB-786's proprietary CPU cooler from Advantech is a must. Other brands' CPU coolers are NOT compatible with ASMB-786.