ASMB-622

Dual LGA 4189 Intel® Xeon® Scalable Proprietary Server Board with 16 DDR4, 4 PCIe x16, 3 PCIe x8, 1 PCIe x4, 4 SATA3, 4 USB3.0, IPMI

CE FCC

Features

- Proprietary server board with dual Xeon® Scalable processors
- DDR4 3200MHz RDIMM up to 2TB, support Intel Optane Persistent Memory
- 4 SATA3 connectors and 1 M.2 2280
- Four PCIe x16 slots (Gen4) supporting 2 double deck cards
- Quad LAN with Intel I350
- Flexible IO board design

Specifications

Form Factor		Proprietary 326 x 243 mm (12.83" x 9.57")	
Processor System	Socket	Intel LGA 4189	
	CPU type	3rd Gen Intel Xeon Scalable processors (CPU cooler should be purchased separately and TDP up to 165W)	
Core Logic	Chipset	Intel C621A chipset	
Memory	Total slots	16 (1 DIMM per channel)	
	Capacity	Maximum 2TB ECC LRDIMM Maximum 1TB ECC RDIMM	
	Memory type	DDR4 2666/2933/3200MHz RDIMM, LRDIMM	
	Memory size	8GB, 16GB, 32GB, 64GB, 128GB (LRDIMM)	
Expansion Slots	Total PCIe slots	8	
	Lower Right Riser Card Cage-Slot 1	FH/FL PCIe x16 slot (x16 link), signal from CPU0	
	Lower Right Riser Card Cage-Slot 2	FH/FL PCIe x16 slot (x16 link), signal from CPU1	
	Upper Right Riser Card Cage-Slot 3	FH/FL PCIe x16 slot (x16 link), signal from CPU0	
	Upper Right Riser Card Cage-Slot 4	FH/FL PCIe x16 slot (x16 link), signal from CPU1	
	Middle Riser Card Cage-Slot 5	FH/HL PCIe x8 slot (x8 link), signal from CPU0	
	Middle Riser Card Cage-Slot 6	FH/HL PCIe x8 slot (x4 link), signal from PCH	
	Left Riser Card Cage-Slot 7	FH/HL PCIe x8 slot (x8 link), signal from CPU1	
	Left Riser Card Cage-Slot 8	FH/HL PCIe x8 slot (x8 link), signal from CPU1	
Graphics	VGA	Aspeed AST 2500	
Storage	SATA controller	Intel C621A: 4 x SATA3 (600 MB/s) support software RAID 0,1,5,10	
	SAS controller	-	
	NVMe controller CPU0	2 x NVMe support VROC (optional)	
Networking	GbE	4 x Intel I350	
Onboard I/O Connector	PSU connector	Power card edge connector, 2 x 8 pin and 2 x 4 pin ATX power connector	
	USB connector	2 x USB2.0 ports (type A) + 2 x USB3.0 ports (onboard header)	
	Fan header	6 (4 for system fan + 2 for CPU fan)	
	M.2	1 x M.2 2280 B+M key (SATA/PCIe)	
	SMBus	1	
	Chassis intruder	1	
	Front LAN LED	1	
	Audio Header	-	
	PS/2 Keyboard/Mouse header	-	
	Serial port header	-	
Rear I/O Connector	External serial port	1	
	External USB port	2 (USB3.0)	
	VGA port	1	
	RJ-45	5 (1 port dedicated BMC)	
	PS/2 Keyboard/Mouse	-	
	Infiniband	-	
Management Solution	Software	-	
	Out of band remote management	Yes	
Monitoring	CPU temperature	Yes	
	System Monitoring	Yes	
Watchdog Timer	Output	System reset	
	Interval	Programmable 1 ~ 255 sec/min	
Environment		Operating	Non-operating
	Temperature	0 ~ 40 °C, depends on CPU speed and cooler solution	-40 ~ 85 °C
	Humidity	10% ~ 95%	10% ~ 95% (Non condensing)
Physical Characteristics	Dimension (L x H)	326 x 243 mm (12.83" x 9.57")	

All product specifications are subject to change without notice.

Last updated: 20-Feb-2021

Block Diagram

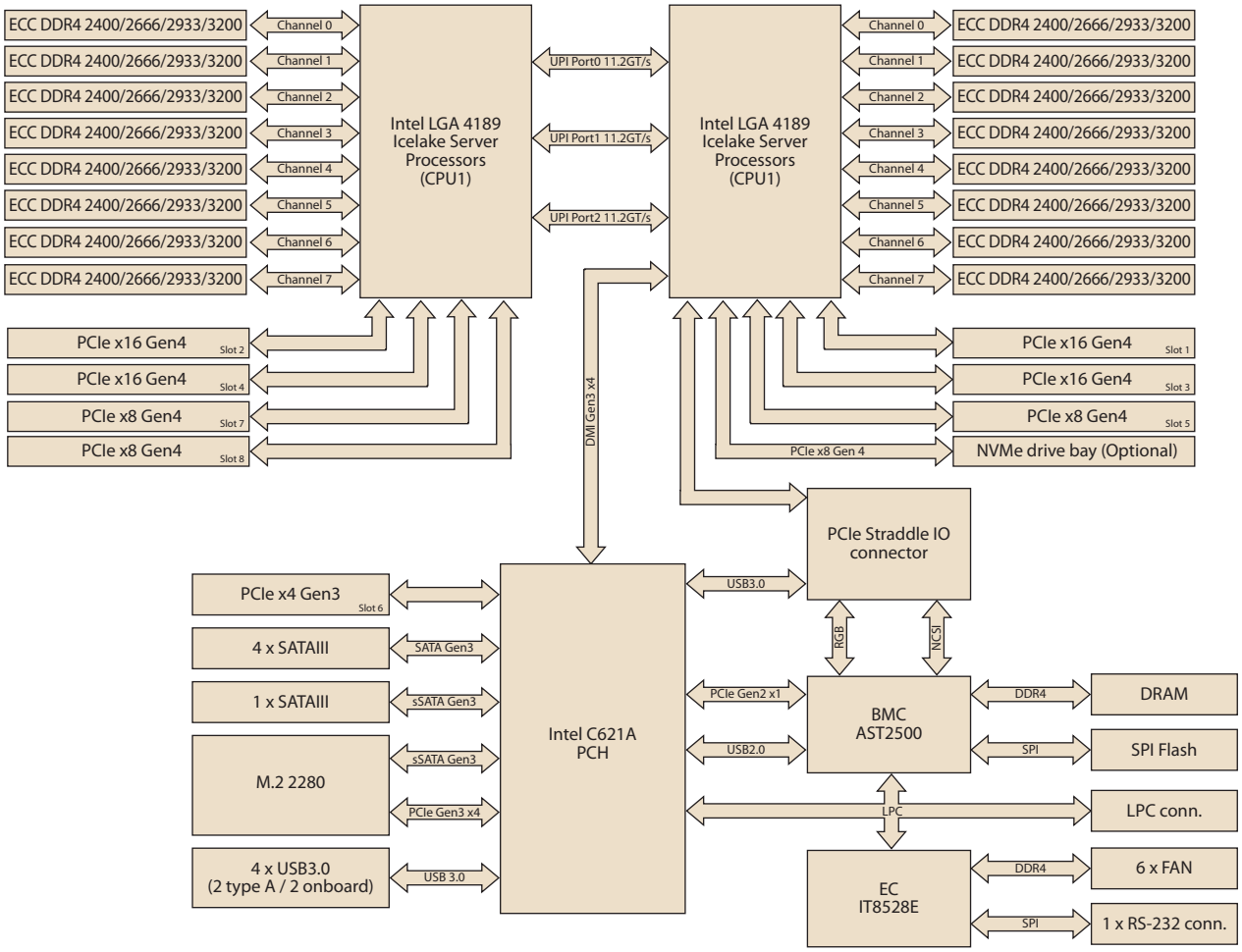

Ordering Information

Part Number	Chipset	Memory	GbE/10GbE LAN	IPMI	Graphics
ASMB-622-00A1	C621A	16 x DDR4 RDIMM/LRDIMM	4/-	Yes	AST 2500

Packing List

Part Number	Description	Quantity
TBD	Startup manual	x 1
1930008089	Screw for M.2 device	x 1
1651003476-01	LGA4189 CPU carrier	x 2
TBD	Power cable for expansion card	x 1
TBD	Mini SAS to SATA cable	x 1

Optional Accessories

Part Number	Description
PCA-TPM-00B1E	TPM 2.0 module
1970004597T000	LGA4189 narrow CPU cooler for 2U/4U chassis
1700021735-01	ODD SATA cable
96CB-SATAPOWER-6P2	ODD power cable
TBD	2-port NVMe drive kit

I/O View