POC-W213L

21" Clinical Grade Widescreen Point-of-Care Terminal

Features

- Runs on Intel® 7th generation, kabylake processor with a fanless, high performance profile
- Ultra-thin display, only 65 mm slim at its widest point
- Capable of displaying crystal clear images on its 21.5" wide-screen display
- Isolated design provides unique electric leakage protection for LAN ports
- IPX1 water resistant enclosure with additional IP65 dust-tight front panel
- Support Intel® firmware trusted platform module (TPM) with Intel® Platform Trust Technology (Intel® PTT)
- Optional Bluetooth, RFID inner WLAN module, and RS232 COM ports

Specifications

MB (2 in 1) PCM-8721	CPU	Intel Kaby Lake Core i5-7300U Optional Intel Celeron 3965U
	Memory	1 x DDR4 SODIMM slot (Default 4GB; Up to 16GB)
	Primary Storage	Optional SATA SSD/HDD
	raphics Controller	Intel® HD Graphics 610/620
	Expansion Slot x 2	Full Mini-PCIe x 1 + M.2 Slot x 1
Display	Size	21.5" W TFT LCD
	Max Resolution	1920 x 1080 FHD
	Viewing Angle	178*178
	Pixel Pitch	248.25 x 248.25
	Luminance	250 cd/m^2
	Contrast Ratio	3000 (Typ.)
Touchscreen	Type	Projected Capacitive
	Light Transmission	0.85
	Controller	FPC
	Durability	>100 million touches
	Resolution	Continuous
Front Button on dashboard	Power Button	1
Rear I/O	USB 3.0	2
	USB 2.0	2
	LAN	2 x Gigabit Ethernet (1.5KV isolated) interfaces (RJ45)
	Display PortOut Up to 4096 x 2304 @ 60Hz	1
	HDMI out Up to 4096 x 2304 @ 24Hz	1
	Optional: COM RS232 serial port	2
	DC Jack 2pin	1
Audio	Speaker	1.5 Watt x 2
Optional Functions	WLAN & Bluetooth	Dual-band (2.4/5GHz) 802.11 a/b/g/n/ac 2Tx/2RxWifi &Bluetooth v4.1 (Optional v4.2)
Power Supply	DC Model	DC Adapter C14 DC PLUG 180°
	Input Voltage	90 ~ 240 V_{AC}, 1.3 ~ 0.8A @ 47 ~ 63Hz
	Output Voltage	12 V_{DC}, 7A
Software	Operating System (Optional)	Windows 10 IoT, Linux
IP Rating	Front Panel	IP65
	Entire System	IPX1
Certifications		CCC, CE, UL, FCC
Environment	Temperature	Operating: 0 ~ +40 °C, Storage: -20 ~ +60 °C
	Humidity	10 ~ 95% @ 40 °C (Non-condensing) (Operating); 5 ~ 95% @ 40 °C (Non-condensing) (Storage)
	Shock Resistance	20G peak acceleration (11ms duration)
Mechanical	Mounting	VESA 75 x 75 mm & 100 x 100 mm
	Dimensions (W x H x D)	550 x 360 x 65 mm (21.65" x 14.17" x 2.56")
	Weight	6.9kg (15.2lb)

Dimensions

Unit: mm

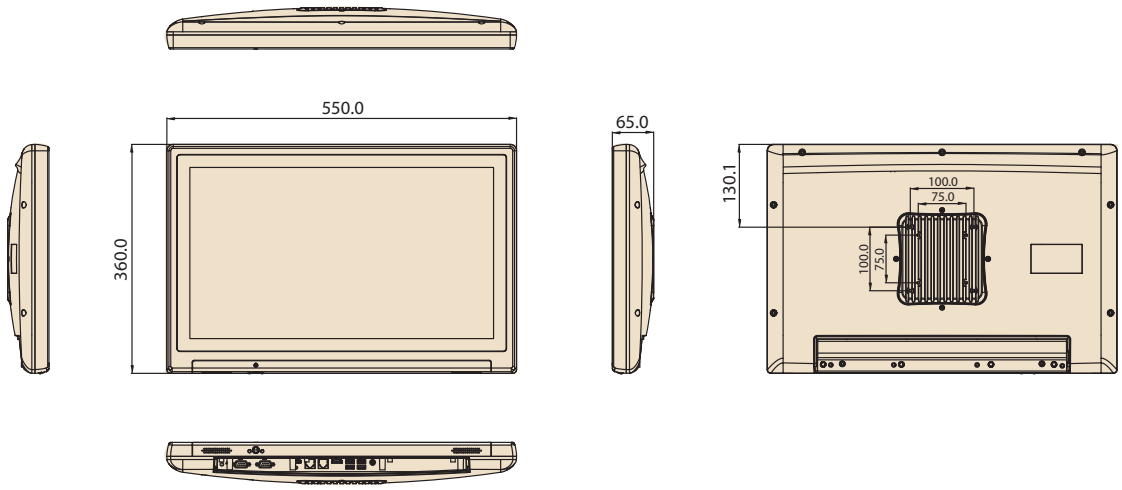

I/O Ports

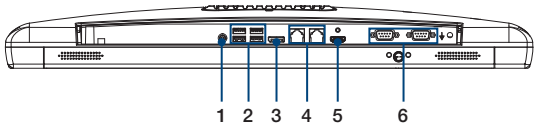

1. DC in
2. 2 x USB 3.0 Ports; 2 x USB 2.0 Ports
3. 1 x Display Port
4. 2 x Gigabit Ethernet (1.5KV isolated) interfaces (RJ45)
5. 1 x HDMI out Port
6. Optional 2 x RS-232 Serial Port
   Option: Non isolation

Function Key

Ordering Information

Part Number	CPU	DRAM	Touch Panel
POC-W213L-B00D-ACE	Core i5 7300U	4G	P-CAP
POC-W213L-C00D-ACE	Celeron 3965U	4G	P-CAP

Accessories

Part Number	Description
PDC-W215-STAND-H3E	PDC-W215 STAND_H3-741L type_6~12kg Black
1702002600	Power Cord UL 3P 10A 125V 183cm
1702002605	Power Cord EU 3P 10A 250V 183cm
1700018704	Power Cord BSI 2P 10A 250V 180cm
1700009652	Power Cord CCC 3P 10A 250V 187cm

Optional Modules

Part Number	Description
POC-W213L-WF3E	802.11 a/b/g/n/ac,QCA6174A,2T2R,w/BT4.1,M.2 2230
POC-W213L-WF2E	Intel® Dual Band Wireless-AC 8265

For information about RFID module.&COM RS232 function,Please contact Advantech Sales team.