PWS-450

3.8" Rugged Handheld

Features

- TI AM3715 1GHz
- 3.8" WVGA high resolution sunlight readable LCD
- Complete communication: WIFI, Bluetooth, GPS, WWAN (3.75G)
- Standard models include an integrated 1D laser Scanner and AutoFocus 5M camera
- Optional data capture modules: 2D imager scanner and HF RFID reader.
- Dual microphone designed with echo cancellation and noise reduction for clear voice communication
- IP65-certified, 5ft drop to concrete
- Support Windows Embedded Handheld 6.5 Professional and Classic

Introduction

The PWS-450 is a rugged handheld computer featuring a 3.8" transflective WVGA TFT LCD display, and TI AM3715 1GHz processor. With HSPA+ (3.75G), 802.11 a/b/g/n, Bluetooth, barcode and GPS, PWS-450 provides a fully-functional communication device for any outdoor applications. PWS-450 is constructed with an IP65 rating guaranteeing protection against dirt, dust and water. Driven by a high capacity battery, PWS-450 withstands a 5-foot drop, and can operate in an extreme range of operating temperatures, providing mobility in any harsh environment. Advantech's PWS-450 is a strong and rugged device for reliable mobile communications in any environment.

Specifications

Processor	CPU	TI AM3715 1GHz
Memory		512MB Mobile DDR RAM on board
Storage		512MB NAND Flash on board (with MicroSD expansion slot support up to 32GB of storage)
Audio System		Dual Microphone with Echo Cancelation and Noise reduction design, 1W Speaker, 3.5mm headset jack, Receiver
Display	Size/ Type	3.8" transflective TFT LCD
	Max. Resolution	WVGA resolution (800 x 480)
Touch Panel		4-wire resistive touch panel
Application Buttons		26-key Numeric keypad Two side buttons for Barcode scan One side button for Camera trigger
I/O Port		1 x microSD slot with SDHC Support (up to 32GB) 1 x USB 2.0 Client (through charger cable); 1 x Audio headset jack
Communication		802.11 a/b/g/n WLAN module build in Bluetooth v2.1 +EDR
		GPS module with antenna build-in (u-blox® 6 High Performance GPS chipset supporting AssistNow® AGPS and GALILEO system) WWAN 3.75G Radio: UMTS / HSPA+, 3GPP release 6 / 7 USA: Dual Band UMTS/HSPA+ (850, 1900 MHz), Dual-Band GSM (850/1900 MHz) EU: Dual Band UMTS/HSPA+ (900/2100 MHz)
Data Collection		Integrated 1D laser Scanner and 5.0 megapixel autofocus camera with flash Optional 2D imager scanner (project base) Optional RFID reader. Tag support: ISO15693, ISO14443A , ISO14443B, support NFC (Project base)
Symbologies	1D Barcode Engine	Australian post, British post, Canedian post, Codabar, Code 11, Code 128, Code 39, Code 93, EAN 13, EAN 8, IATA 2 of 5, ITF, ISBT, Japanesepost, Kix code (nl), Korean post, Matrix 2 of 5, MSI, Planet code, Postnet, RSS expanded, RSS limited, RSS 14, UPC A, UPC E, UPC E1
	2D Imager (optional)	Aztec, Codablock F, Code 49, Datamatrix, EAN-UCC, composite, Maxicode, Micro PDF417, PDF 417, QR code, Tcif lonked C39
Dimensions & Weight		17.8 x 7.4 x 4.1 cm (Antenna length excluded), 390g
Power	Battery	Li-ion smart battery, 8.14 Watt-Hour 3.7V @ 2200 mAh (default) 14.8 Watt- Hour 3.7V @ 4000 mAh (Optional)
	DC input	5V ± 5%
Environment	Operating Temperature	-10 ~ +50° C
	Storage Temperature	-20 ~ +60° C
	Operating Humidity	5%~95%
OS		Windows Embedded Handheld 6.5 Professional and Classic
Rugged Certification		IP65 5 Feet drop to concrete
Certifications		CE, FCC, CCC

Dimensions

Unit: mm [inch]

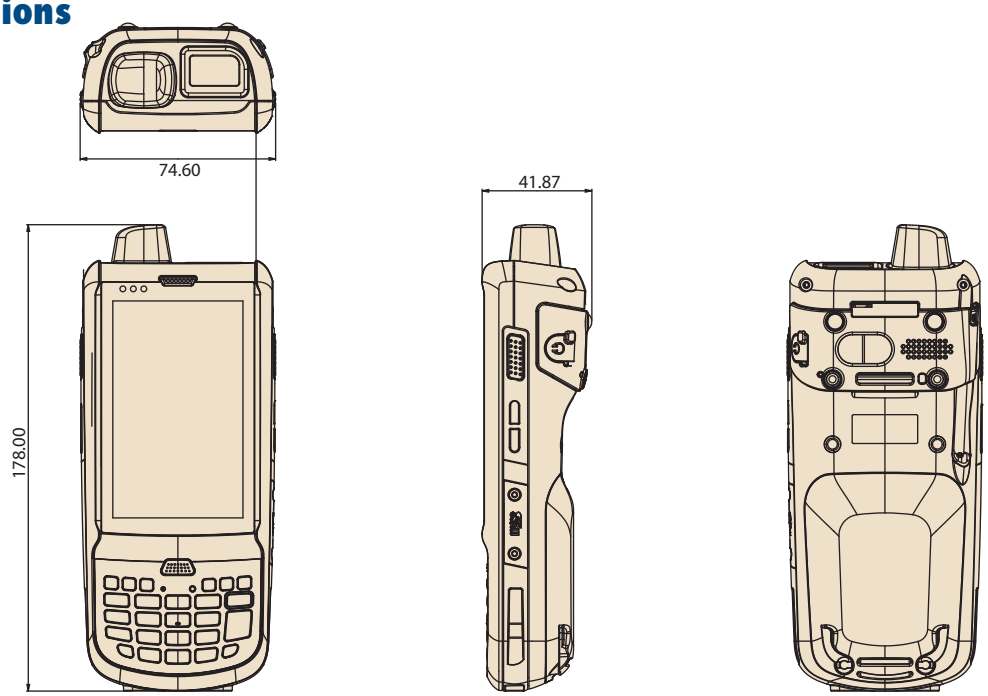

Ordering Information

Part Number	Description
PWS-450-9261UADGE	PWS-450 with WLAN/BT/ Embedded Handheld 6.5 Classic
PWS-450-9892UADGE	PWS-450 with WLAN/BT/GPS/3.5G/ Embedded Handheld 6.5 Professional

Bundle at purchase: PWS-450 device, Li-ion battery (3.7V, 2200mAh), USB holder cable, Power adapter with universal Plug, Stylus, and hanstrap.

Accessories

Part Number	Description
PWS-450-BAT200E	PWS-450 3.7V 4000mAh Li-Ion battery
PWS-450-CRADLE00E	PWS-450 Desk Docking with battery charger
PWS-450-ADAP00E	PWS-450 Adaptor 100-40V 5V 3A

I/O Connectors

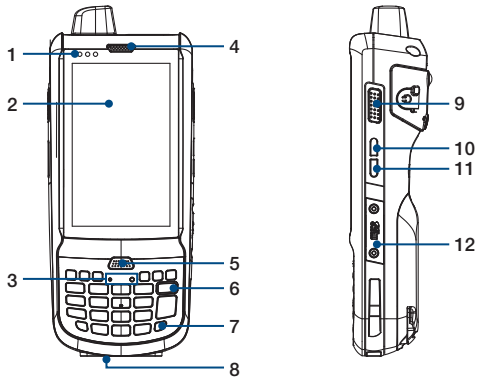

1. LED indicators
2. LCD touch screen
3. Microphone
4. Receiver
5. Scanner trigger button
6. Power button
7. Keypad
8. Universal connector
9. Scanner trigger button
10. Mute
11. Camera
12. Memory card slot

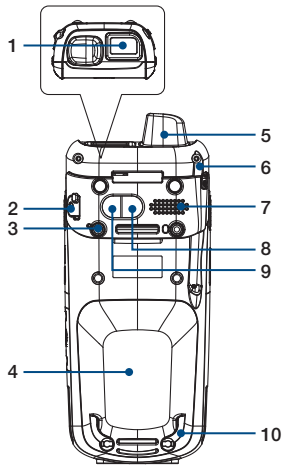

1. Barcode scanner window
2. Earphone jack
3. Microphone
4. Battery compartment
5. Antenna
6. Stylus
7. Speaker
8. 5M/AF camera
9. LED flash light
10. Battery compartment tab