PWS-870

10寸工业平板电脑
搭载第四代 Intel® Core™ i 处理器

特性

- MIL–STD–810G和IP65认证，可承受4ft跌落
- 10.1寸高清高亮度多点触控、Gorilla玻璃和数位面板
- 第四代Intel® Core™ i 处理器，支持Windows 8操作系统
- 内置4G LTE, WLAN (802.11 a/b/g/n/ac), BT4.0和 GPS 模组，支持 Beidou/GLONASS
- 热插拔电池提供高达11小时运作
- 内置双摄像头，1D/2D条码扫描仪和NFC RFID阅读器
- 丰富配件–车载底座、桌面支架和扩展模组

简介

PWS–870是10.1寸坚固型高清分辨率移动平板，电容多点触控面板，搭载Intel Core i 处理器，mSATA SATA3 SSD 存储，USB 3.0 和 HDMI 通信 IO 端口。802.11 a/b/g/n/ac WiFi, Bluetooth, GPS, 和 4G LTE 通信。最重要的独特设计之一是内置数据采集模块：2M/5M双摄像头，1D/2D条码扫描仪和NFC RFID阅读器。对于户外移动作业人员，热插拔电池可提供持续11小时运作。全坚固型设计（MIL–STD–810G和IP65防尘防水认证及4ft跌落测试）可在严苛环境应用，阳光下可读。PWS–870是户外作业的完美之选。

规格

主板	CPU & 芯片	Intel® Core™ i3 Processor 1.7 GHz 4010U Intel® Core™ i5 Processor 1.9 GHz 4300U with Turbo Boost to 2.9GHz Intel® Core™ i7 Processor 1.7 GHz 4650U with Turbo Boost to 3.3 GHz	
	内存	SO-DIMM DDR3L 1600 MHz up to 8 GB(*2)	
	存储	Support mSATA SATAIII SSD 64 GB ~ 256 GB(*2)	
显示&触摸屏	显示屏尺寸	10.1" HD (1366x768) Low reflection LED Backlight LCD (400 nits default; 950 nits by project)	
	触摸屏	Capacitive multi touch Sunlight readable feature Display with Corning® Gorilla® Glass Gen3	
	传感器	Ambient light, Accelerometer (G-Sensor), E-compass , Gyroscope Sensor - Screen Rotation: 0°, 90°, 270°	
系统	WLAN+蓝芽	IEEE 802.11 a/b/g/n/ac+ Bluebooth V4.0(class2)+EDR	
	WWAN	Integrated 4G (LTE,HSPA+,GSM/GPRS/EDGE) MC7305 for EU B1/B3/B7/B8/B20 MC7355 for US B2/B4/B5/B13/B17/B25	
	GNSS	Dedicated GPS, Beidou and Glonass	
	摄像头	Front Camera: 2M pixel CMOS sensor; supports video streaming Rear Camera: 5M pixel CMOS sensor; with LED flash light and auto focus control	
	数据采集	Optional built-in 1D barcode scanner (Honeywell N4313) Optional built-in 2D barcode scanner (Honeywell N5600) Optional built-in NFC RFID reader (13.56MHz, supports ISO14443A/B, ISO15693, MIFARE, Felica)	
	安全防护	1. Optional fingerprint scanner 2. TPM 1.2 3. Kensington cable lock slot	
	声音设备	Integrated speakers (2W) Integrated microphone	
	输入	Capacitive multi touch Programable button x2	Capacitive pen On-screen QWERTY keyboard
	LED	Power LED Battery LED RFID LED	
	I/O	USB 3.0 x2; USB 2.0 x1 HDMI 1.4 x1 SD card slot x1 (SDXC/UHS1/UHS2) Audio combo jack (Line-in/Line-out) x1	DC-in x1 Docking port x1 (32PIN) (USB3.0, USB2.0, PCIE Gen2, Display port) SIM slot x1
	电池	Main battery: 4S1P 14.4V 2730mAh Hot-Swappable external battery: 4S2P 14.4V 4080mAh With Hot-Swappable external battery up to 11hrs(*1)	
	电源输入	19V ± 5%	
	OS	Windows Embedded 8.1 Industry Pro (Default), Windows Embedded 8 Standard (Default), Windows 7 Pro 64bit (By project), Linux Ubuntu (By project) Windows 10 IoT 64 bit (By project)	

(1)电池寿命估计基于MobileMark 2007性能, 电池性能将因系统设定和配置而异
(2)仅研华挪有SSD卡及内存变更权

规格

工作环境	温度＆湿度	Operating Temperature -20° C ~ 50° C (Charge: 0° C ~ +40° C for the battery protection) Storage Temperature -20 ~ 60° C Operating Humidity 5% ~ 95% @ 40° C	
	IP等级认证	IP65	
	抗震动	MIL-STD-810G	
	摔落测试	4 feet	
认证	EMC/RF	CE/FCC/CCC/PTCRB/SAR	
	安全	UL/CE/CB/CCC	
外设	外围设备 x3	▪ Universal Cover (Handle, stand, hand strap, and shoulder belt) ▪ Extension modules for MSR, UHF RFID, extra IO ports solution ▪ Desk docking station ▪ External battery	▪ Car adapter ▪ Vehicle docking staion ▪ Multiple Battery Charger
尺寸&重量	尺寸	305 (L) x 207 (W) x 25~27 (H) mm	
	重量	1.4 kg	

(3)如有外围设备需求请洽研华业务

尺寸

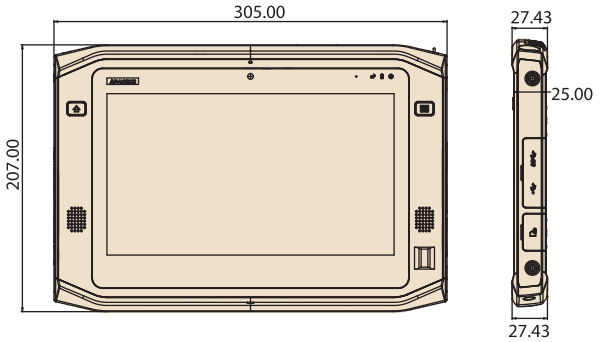

Unit: mm

I/O 视图

1. 兩百萬像素摄像头
2. 主键（可编程）
3. 功能键（可编程）
4. 扬声器
5. 指纹辨识（选配）
6. 五百万像素自动对焦摄像头
7. 风扇
8. NFC RFID 阅读器（选配）
9. 电容笔
10. 锁存器（用于外部电池）

1. Kensington 锁
2. 电源键
3. 音频组合插孔
4. HDMI 端口(1.4)
5. USB 端口(USB3.0)
6. 直流电输入

7. 扩展模块螺丝孔
8. USB端口(USB3.0)
9. USB端口(USB2.0)
10. SD卡槽(SDXC)
11. 扩展模块螺丝孔

订购信息

Part Number	Configuration												Fingerprint
	CPU	LCD	Memory	Storage	Front/Rear CAM	WiFi	BT	GNSS	4G	OS	Barcode RFID	NFC	
PWS-870-3S6W0E000E	Core i3	Sunlight	DDR3 4GB	SSD 64GB	V	V	V	N/A	N/A	WES 8	N/A	N/A	N/A
PWS-870-3S6W00000E	Core i3	Sunlight	DDR3 4GB	SSD 64GB	V	V	V	N/A	N/A	N/A	N/A	N/A	N/A
PWS-870-3S6G4E5F0E	Core i3	Sunlight	DDR3 4GB	SSD 64GB	V	V	V	V	LTE-US	WES 8	2D	NFC	FingerPrint
PWS-870-3S6G6E5F0E	Core i3	Sunlight	DDR3 4GB	SSD 64GB	V	V	V	V	LTE-EU	WES 8	2D	NFC	FingerPrint
PWS-870-3H6G6E5F0E	Core i3	High Brightness	DDR3 4GB	SSD 64GB	V	V	V	V	LTE-EU	WES 8	2D	NFC	FingerPrint
PWS-870-5S6G4P5F0E	Core i5	Sunlight	DDR3 4GB	SSD 64GB	V	V	V	V	LTE-US	Win8.1 Pro	2D	NFC	FingerPrint
PWS-870-5S6G6P5F0E	Core i5	Sunlight	DDR3 4GB	SSD 64GB	V	V	V	V	LTE-EU	Win8.1 Pro	2D	NFC	FingerPrint
PWS-870-7S6G4P5F0E	Core i7	Sunlight	DDR3 4GB	SSD 64GB	V	V	V	V	LTE-US	Win8.1 Pro	2D	NFC	FingerPrint
PWS-870-7S6G6P5F0E	Core i7	Sunlight	DDR3 4GB	SSD 64GB	V	V	V	V	LTE-EU	Win8.1 Pro	2D	NFC	FingerPrint
PWS-870-7H6G6P5F0E	Core i7	High Brightness	DDR3 4GB	SSD 64GB	V	V	V	V	LTE-EU	Win8.1 Pro	2D	NFC	FingerPrint

附件清单

Part Number	Description
96PSA-A65W19V1-1	65W Adapter *1 pcs
9680015843	Stylus Pen * 1 pcs

PWS-870/872 外部设备

选配週边设备及扩展模组
适用于PWS-870/872系列

保护壳组合

特色

- 材质：塑料、PVC
- 颜色：黑色
- 尺寸：305 x 254.2 x 88.4 mm (12 x 10 x 3.48 in)
- 重量： 500 g (1.10 lb)
- 组合内容：手肩带保护壳、手带、选配皮套、支架

扩展模块

MSR & 智能卡读卡器

特色

- 智能卡读卡器
  - ISO 7816 PC/SC
  - EMV 4.0 Level 1
  - 支持 I2C记忆卡 (SLE4418, SLE4428, SLE4432, SLE4442, SLE4436, SLE5536, SLE6636, AT88SC1608, AT45D041)
- 磁条卡读卡器
  - MagneSafe™ IntelliHead
  - 支持US 7810, ISO 7811/AAMVA
  - 读卡速度： 6 ~ 60 IPS (15.4 ~ 12.4 cm)
  - 三重数据加密算法
  - DUKPT 密钥匙管理
- 操作温度：-20 ~ 50 °C
- 存储温度：-20 ~ 60 °C
- 尺寸：192.2 x 40.2 x 25 mm (7.56 x 1.58 x 0.98 in)
- 重量： 120 g (0.26 lb)

附加 I/O

特色

- 介面：1 x USB 3.0 (type A, 5V/0.9A), 2 x RS-232 (D-sub 9), 1 x 10/100/1000 Ethernet (RJ45)
- 操作温度：-20 ~ 50 °C
- 尺寸：192.2 x 45.2 x 25 mm (7.56 x 1.77 x 0.98 in)
- 重量：140 g (0.30 lb)

UHF RFID 读取器

特色

- RFID 输出功率：0.063W EIRP
- RFID 天线类型： Linear polarization
- 频率：EU: 865 ~ 868 MHz, US: 902 ~ 928 MHz
- 支持标准标籤：EPC Class 1 Gen 2/ISO 18000-6C
- 操作温度：-20 ~ 50 °C
- 最大输出：+18dBm (conductive)
- 尺寸：92.2 x 40.2 x 25 mm (7.56 x 1.58 x 0.98 in)
- 重量： Weight: 110 g (0.24 lb)

外部电池

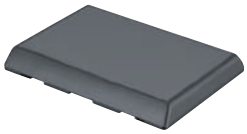

特色

- 容量：14.8V 4080mAh
- IP 等级：IP65
- 尺寸：141.2 x 106.2 x 17 mm (5.55 x 4.18 x 0.66 in)
- 重量：385 g (0.84 lb)

多電池充電座

特色

- 最大支持4个外部电池
- 充电时间：4 hr
- 充电状态指示LED灯
- 螺丝孔不外露
- 输入电力：19.5V/7.7A
- 尺寸：214.4 x 229.4 x 60 mm (8.44 x 9.03 x 2.36 in)
- 重量：1.4 kg (3.08 lb)

触控笔 (for PWS-872)

特色

- 操作频率： 90 ~ 250 KHz
- 操作温度： 0 ~ 50 °C
- 按钮： 2 x Side buttons (eraser, barrel)
- 电池：1 x AAAA (replaceable)
- 尺寸：140 x 9.7 mm (5.51 x 0.38 in)
- 重量： 70 g (0.15 lb)

萤幕保护膜 (for PWS-872)

特色

- 10.1" 可替换防眩光保护膜

订购信息

Part Number	Description
PWS-870-UCOVER00E	Universal cover package (for PWS-870/872 series)
PWS-870-EXT300E	MSR and smart card reader (for PWS-870/872 series)
PWS-870-EXT100E	I/O extension module (for PWS-870/872 series)
PWS-870-EXT200E (EU)	UHF RFID reader (for PWS-870/872 series)
PWS-870-EXT210E (US)	UHF RFID reader (for PWS-870/872 series)
PWS-870-BAT100E	External battery (for PWS-870/872 series)
PWS-870-MBC00E	Multi-bay battery charger (for PWS-870/872 series)
PWS-872-ACTPEN	Active pen (for PWS-872)
PWS-872-PROFILM	10.1" replacement screen protection film (for PWS-872)

PWS-870/872 外部设备

PWS-870/872 系列的车载底座

特色

- CAN 2.0 A/B (J1939) & OBDII (ISO 15765) 技术支持车载诊断
- 防盗装置
- GPS SMA 外置天线
- 相容12V/24 V车载电源
- 点火控制
- 快速设备对接、卸除
- 提供完整的端口複製
- 符合MIL-STD-810G & SAE J1455 防震防衝击标准
- E-mark (E13) 车载安全认证

规格

I/O	HDC	1 x HDC connector
	HDC I/O	1 x RS-232, 1 x CAN 2.0 A/B (supports J1939) with OBDII protocol (supports ISO 15765), 1 x line-in, 1 x line-out, 2 x DI, and 2 x DO
	USB	2 x USB 3.0 (locking type)
	Ethernet	1 x 100/1000 LAN (M12)
	SMA for GPS	1 x for external GPS antenna
	DC-In	1 x Power jack (M12) 19V ± 5% (can be paired with a vehicle adapter (PWS-770-CAD1200E/PWS-770-CAD2400E/PWS-770-CADAP00E) or DC-in (M12) adapter cable (1700021797-01)
环境	IP 等级	IP54 (with tablet docked and all cables connected)
	操作温度	-20 ~ 50 °C (0 ~ 40 °C when charging) with tablet docked
	存储温度	-40 ~ 85 °C
认证	防震防衝击	MIL-STD-810G, Method 514.5; SAE J1455
	EMC	CE, FCC
	安全	UL, CB
	车载安全	E-mark (E13) (when paired with PWS-770-CAD1200E/PWS-770-CAD2400E)
背挂		VESA (75 x 75 mm)
重量		950 g (2.09 lb)
尺寸		240.5 x 280.9 x 95.4 mm (9.46 x 11.05 x 3.75 in)

订购信息

Part Number	Description (for PWS-870/872 series)
PWS-870-VCRADLE00E	Vehicle docking station with LAN cable and M12(M) to 8P/RJ45(F) cable (5 cm)
PWS-870-VCRADLE01E	Charge-only vehicle docking station
PWS-870-VMOUNT00E	Vehicle docking station without I/O
PWS-770-CADAP00E*	Vehicle power DC 10 ~ 32V 90W (120cm) to cigarette lighter adaptor with M12 connector
PWS-770-CAD1200E*	Vehicle power DC 10 ~ 32V 90W adaptor with 12V relay (120 cm) and M12 connector
PWS-770-CAD2400E*	Vehicle power DC 10 ~ 32V 90W adaptor with 24V relay (120 cm) and M12 connector
1700021797-01	M12 connector to DC-in cable (10 cm) Note: Connect the PWS-870/872 vehicle docking station DC-in port (M12) to the power jack adapter (96PSA-A65W19V1-1)
PWS-870-CHDC00E	Vehicle docking station HDC cable (200 cm), supports 1 x RS-232, 1 x CAN 2.0, 2 x DI, 2x DO, 1 x line-in, 1 x line-out
PWS-770-GPSAN00E	GPS antenna cable 5.5V 22mA (500 cm)
RAM-MOUNT-06E	5.625" double socket arm for 1.5" ball base, 3.625" VESA base at both sockets
RAM-MOUNT-07E	5.625" double socket arm for 1.5" ball base (1 socket with 3.625" VESA base, 1 socket with flat 2.5" diameter base AMPS hole pattern)
PWS-870-VDOCK-CBE	Vehicle docking starter cable kit (power cable, HDC cable, and GPS antenna)

Notes:

1. The PWS-870/872 vehicle docking station includes a LAN cable for M12-to-RJ45 connector. The vehicle adapter is optional. Do not attempt to connect the vehicle adapter M12 plug to the tablet's DC-in port.
2. Advantech strongly recommends initially purchasing the starter cable kit and power adapter for evaluation (suitable power adapters are marked*)

下方I/O

1. 1 x LAN 100/1000 (M12)
2. 1 x GPS SMA
3. 2 x USB 3.0 (locking type)
4. 1 x HDC: 1 x RS232, 1 x CAN 2.0, 2 x DI, 2 x DO, 1 x line-in, 1 x line-out
5. 1 x DC-in (M12)

尺寸

Unit: mm

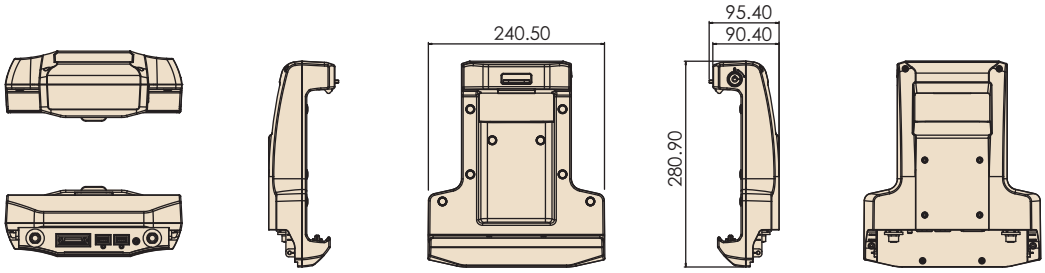

PWS-870/872 外部设备

PWS-870/872 系列的桌上型底座

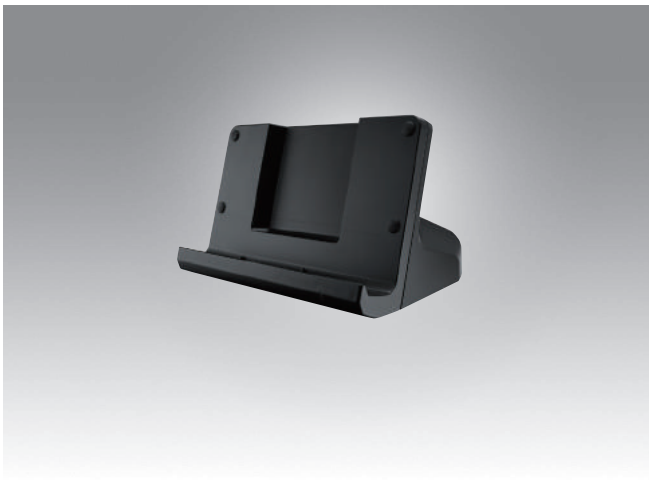

特色

- 提供完整的端口複製给PWS-870/872手持平板
- -20 ~ 50 °C 操作温度

规格

I/O	1 x LAN (10/100/1000) 1 x VGA 1 x RS-232 2 x USB 3.0 host connectors 1 x DC-in (19V ± 5%)
环境	Operating temperature: -20 ~ 50 °C Storage temperature: -20 ~ 60 °C Humidity: 5 ~ 95%
认证	CE, FCC, UL, CB
尺寸	223.8 x 146.7 x 128.5 mm (8.81 x 5.77 x 5.05 in)
重量	820 g (1.80 lb)

订购信息

Part Number	Description
PWS-870-CRADLE00E	Desk docking station for PWS-870/872

注意：本产品没有包括适配器，可使用手持适配器。

I/O

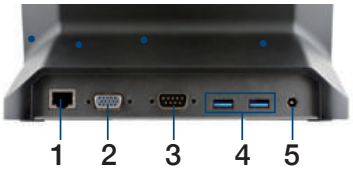

No.	Component	Function
1	LAN 端口	Connect an RJ-45 cable to access LAN connection
2	VGA 端口	Connect a VGA port to connect to another monitor
3	Serial 端口	Connect a serial cable to connect to another PC
4	USB 端口	Connect USB connectors to transfer data
5	DC-in	Connect the AC adapter to charge the battery

注意：为避免造成危害，本充电底座仅适用于PWS-870/872产品。

尺寸
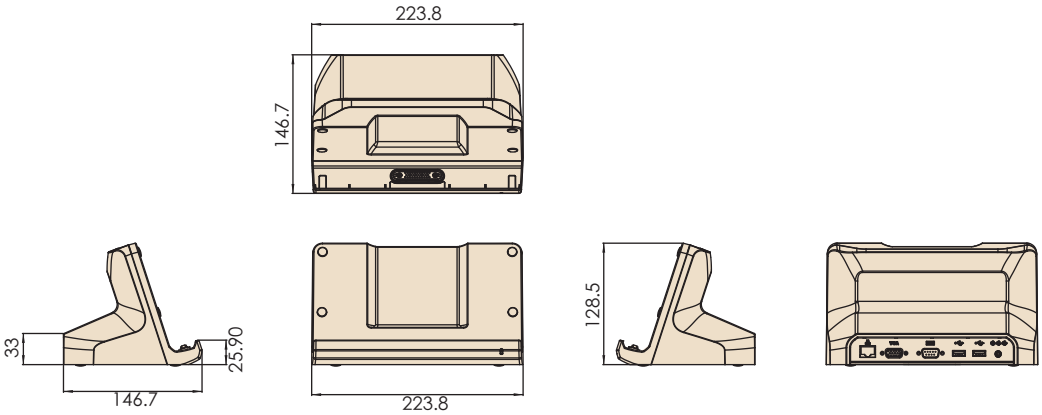
Unit: mm