ITA-3650N

Intel 6th & 7th Generation Desktop Processor Fanless System for Highway Surveillance Application

Windows Embedded

SUSIAccess

RoHS COMPLIANT 2002/95/EC

Features

- Intel 6th & 7th Generation Desktop Processor with H110 PCH
- On board 8GB DDR4, optional on board 16G max to 32GB with SO-DIMM and optional NVRAM
- Supports 6 x GbE, 6 x USB, 8 x COM ports, 24 bit DIO
- Support 2 x 2.5" storage bay & 1 x MSATA
- Support wide temperature -25 ~ 60 °C
- Supports 9 ~ 36V wide range DC input

Specifications

Processor System	CPU	G3900TE	G4400TE	i3-6100TE	i5-6500TE	i7-6700TE	i3-6100	i5-6500	i7-6700
	Processor Base Frequency	2.30 GHz	2.40 GHz	2.70 GHz	2.30 GHz	2.40 GHz	3.70 GHz	3.20 GHz	3.40 GHz
	L2 Cache	2M	3M	4M	6M	8M	3M	6M	8M
	Core Number	2	2	2	4	4	2	4	4
	TDP	35W	35W	35W	35W	35W	51W	65W	65W
	Chipset	H110							
	Operating Temperature	51/65W: -25 ~ 50 °C (with industry SSD) 35W: -25 ~ 60 °C (with industry SSD)							
Processor System	CPU	G3930TE	i3-7101TE	i5-7500T	i7-7700T	i3-7101E	i5-7500	i7-7700	
	Processor Base Frequency	2.70 GHz	3.40 GHz	2.70 GHz	2.9 GHz	3.90 GHz	3.40 GHz	3.60 GHz	
	L2 Cache	2M	3M	6M	8M	3M	6M	8M	
	Core Number	2	2	4	4	2	4	4	
	TDP	35W	35W	35W	35W	54W	65W	65W	
	Chipset	H110							
	Operating Temperature	-25 ~ 50 °C (with industry SSD)							
Memory	Technology	Dual-channel DDR4 2133 MHz (without ECC)							
	Capacity	On board 8GB DDR4, optional on board 16G max to 32GB with SO-DIMM							
Graphics	Controller	Intel® HD Graphics 630/610/530/510							
	VGA	1 x DB15, max resolution up to 1920 x 1080 @ 60Hz							
	HDMI	1 x HDMI, support HDMI1.4 standard, max to 3840 x 2160 @ 30Hz							
	DP	Box Header on board							
	Display Option	Dual Display: VGA+HDMI							
Ethernet	Inteface	10/100/1000 Mbps							
	Controller	1 x Intel® I210; 1 x IWGI219LM: 4 x Intel® I211							
	Connector	6 x RJ-45							
Storage	Internal	1 x mSATA socket							
	External	2 x 2.5" storage bay							
I/O	Main Display	VGA							
	Second Display	HDMI							
	SATA	2 x SATA							
	USB	4 x USB3.0 & 2 x USB2.0							
	LAN	6 x RJ45							
	Serial Port	8 x DB9 (RS232/422/485 with automatic flow control)							
	DIO	1 x DB25, 24bit							
	Audio	1 x Speaker out with 8W amplifier, 1 x Mic-in							
Expansion Slot	Mini PCIe	1 x Mini PCIe &SIM slot							
Power	Input Voltage	9 ~ 36V DC							
Watchdog Timer	Output	System reset							
	Interval	Programmable 1~255 sec/min							
Environment	Operating Temperature	Industry SSD: max to -25 ~ 60 °C							
	Storage Temperature	-40 ~ 85 °C							
Mechanical Features	Dimension (W x H x D)	210 x 118 x 240 mm							
	Install	Wall mount bracket							
Certifications	EMC	CE/FCC, CCC, BSMI							
	Safety	UL, CCC, BSMI							
OS	Windows	Windows 7 & 10 for Skylake; Windows 10 for Kabylake							
	Linux	ubuntu & Fedora							

All product specifications are subject to change without notice.

Last updated: 6-Sep-2019

Dimensions

Unit: mm [inch]

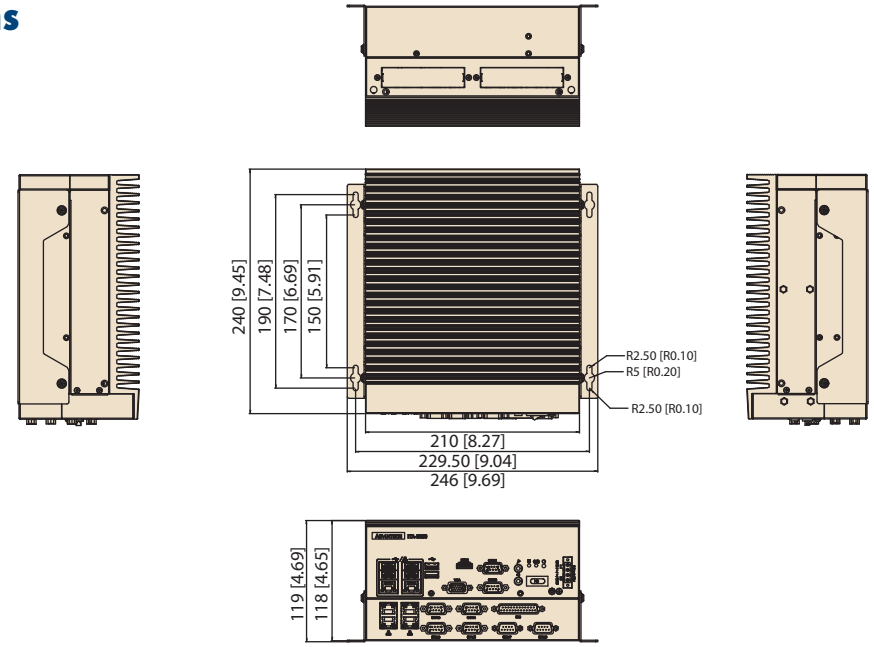

Front View

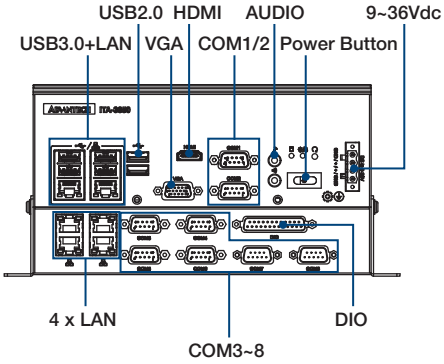

Rear View

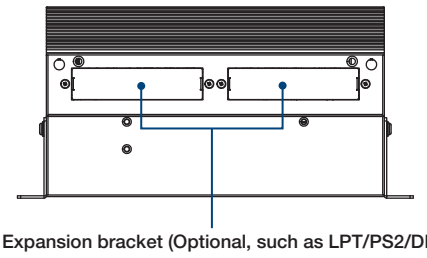

Ordering Information

Part Number	Onboard Memory	VGA	HDMI	USB3.0+USB2.0	LAN	DIO	COM	SATA	MSATA
ITA-3650N-00A1	8GB DDR3	1	1	4+2	6	1	8	2	1

Packing List

Part No.	Description
-	ITA-3650
1960090661N001	2 x Supporting-angels
1652003234	1 x 4-pin Terminal Block

Optional Accessory

Part No.	Description
96PSA-A220W24P4-1	ADP A/D 100-240V 220W 24V C14 TERMINAL BLOCK 4P
96PSA-A150W19P4-1	ADP A/D 100-240V 150W 19V C14 TERMINAL BLOCK 4P
1702002600	Power Cord UL 3P 10A 125V 183cm
1702002605-01	Power Cord EU 3P 10A 250V 183cm
1702031801	Power Cord BSI 3P 10A 250V 183cm
1700000596-11	Power Cord CCC 3P 10A 250V 183cm