TPC-307W

7" WSVGA TFT LED LCD Thin-Client Terminal with Intel® Elkhart Lake

Features

- Industrial-grade 7" WSVGA TFT LCD with 50K lifetime and LED backlight
- Intel® Elkhart Lake (EHL) Atom™ X6211E 1.30 GHz, dual core processor with DDR4 SO-DIMM
- Compact, fanless embedded system with aluminum alloy front bezel
- Wide operating temperature range -20 ~ 60 °C (-4 ~ 140 °F)
- True-flat, IP66-rated front panel
- Front-facing LED indicators to show operating status
- True-flat touchscreen with P-CAP multi-touch control
- Supports AC/DC input with optional power adapter
- Chassis grounding protection
- Supports Advantech's WISE-PaaS/RMM remote management software

Introduction

The TPC-307W thin-client terminal is equipped with a 7" WSVGA TFT LCD, low-power Intel® Elkhart Lake (EHL) Atom™ X6211E 1.30 GHz, dual core processor with DDR4 SO-DIMM to deliver high-performance computing in a compact, fanless system. To enhance the system's durability, TPC-307W features a true-flat touchscreen with IP66-rated front panel, die-cast aluminum alloy front bezel, and P-CAP multi-touch. In addition to supporting a wide operating temperature range (-20 ~ 60 °C/-4 ~ 140 °F), TPC-307W includes a full-size mini PCIe slot for extending the system functionalities to satisfy diverse automation application needs.

Specifications

General

- **BIOS** AMI UEFI
- **Certification** BSMI, CCC, CE, FCC Class A, UL
- **Cooling System** Fanless design
- **Dimensions (W x H x D)** 205 x 146 x 56mm (8 x 5.98 x 2.2 inch)
- **Enclosure** Front bezel: Die cast aluminum alloy
Back housing: SECC
- **Mounting** VESA Mount (75 x 75), Panel, Wall
- **OS Support** Windows 10 Enterprise LTSB
- **Security** TPM 2.0 (built-in)
- **Power Consumption** 19.2 W (typical)
- **Power Input** $24V_{DC} \pm 20\%$
- **Watchdog Timer** 1 ~ 255 sec (system)
- **Weight (Net)** 1.5 kg (3.3 lb)

System Hardware

- **CPU** Intel® Elkhart Lake (EHL)
Atom™ X6211E 1.30 GHz, dual core
- **Memory** 1 x DDR4 SO-DIMM (Up to 16G)
- **LAN** 2 x 10/100/1000BASE-T
- **Expansion Slots** 1 x M.2 E Key 2230 (USB/PCIe)
- **Storage Slots** 1 x M.2 M Key 2242/2280 (SATA/PCIe)
- **I/O** 1 x Power receptor
1 x RS-232
1 x RS-232/422/485
2 x USB3.0
2 x USB2.0
1 x Line Out

LCD Display

- **Display Type** VGA TFT LED LCD
- **Display Size** 7"
- **Max. Resolution** 1024 x 600
- **Max. Colors** 16.7M
- **Luminance cd/m²** 500
- **Viewing Angle (H/V°)** 160/140
- **Backlight Life** 50,000 hr
- **Contrast Ratio** 800:1

Touchscreen

- **Light Transmission** 90% ± 3%
- **Type** P-CAP multi-touch

Environment

- **Relative Humidity** Operating, 95% RH @ 40°C, non-condensing
Non-operating, 95% RH @ 60°C, non-condensing
- **Ingress Protection** Front panel: IP66
- **Operating Temperature** -20 ~ 60 °C (-4 ~ 140 °F)
- **Storage Temperature** -30 ~ 70 °C (-22 ~ 158 °F)
- **Vibration Protection** With M.2 2242: 1 Grms (5 ~ 500 Hz)
(Operating, random vibration)

Rear View

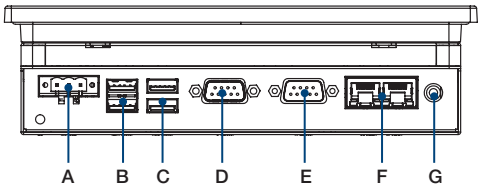

A. Power receptor
B. USB3.0
C. USB2.0
D. RS232
E. RS232/422/485
F. LAN (10/100/1000)
G. Line Out

All product specifications are subject to change without notice.

Last updated: 20-Mar-2024

Dimensions

Unit: mm [inch]

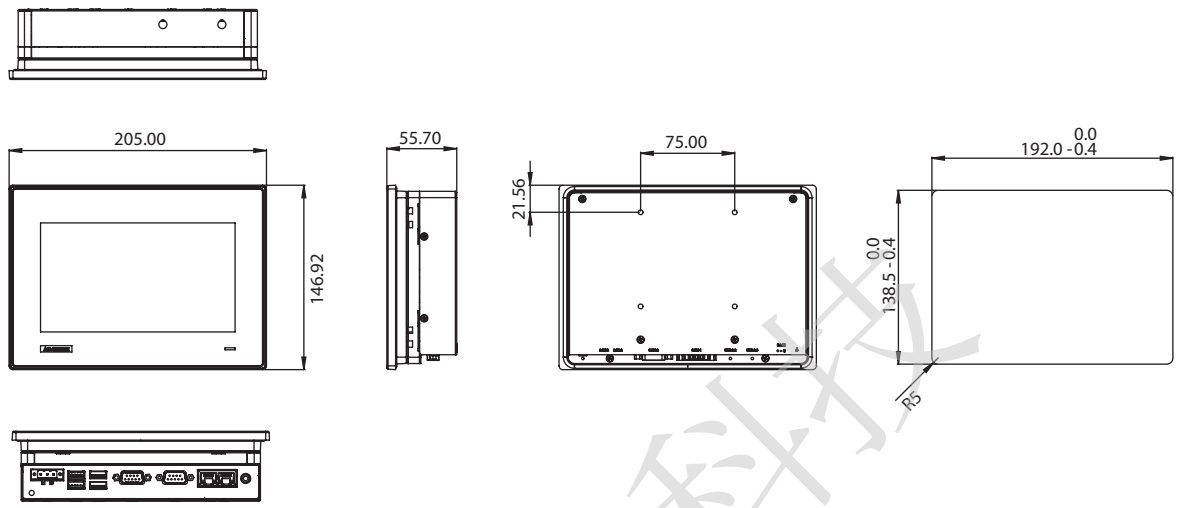

Panel Cutout Dimensions: 192.4 x 139.0 mm

Ordering Information

- **TPC-307W-PE20A** 7" WSVGA Panel PC, Atom X6211E 1.3 GHz
- **20701WX1ES0005** WIN10 LTSC V6.09 B005 for TPC-307W Entry

Optional Accessories

- **PWR-247-DE** 60W 24 V_{DC} /2.5A power supply
- **1702002600** Power Cable US Plug 1.8 M
- **1702002605** Power Cable EU Plug 1.8 M
- **1702031801** Power Cable UK Plug 1.8 M
- **1700000596-11** Power Cable China/Australia Plug 1.8 M

Embedded OS

- **20701WX1ES0005** WIN10 LTSC V6.09 B005 for TPC-307W Entry

Application Software

WebAccess/SCADA	Advantech WebAccess/SCADA is a 100% browser-based IIoT software platform aimed at supervisory control and data acquisition (SCADA) operations. WebAccess/SCADA provides open interfaces that allow our customers and partners to develop unique IoT applications for different vertical markets. In addition to supporting traditional SCADA functions, the platform features an HTML5-based user interface and intelligent dashboard to facilitate cross-platform, cross-browser data analysis. Moreover, WebAccess/SCADA not only offers built-in widgets, but is also equipped with an innovative Widget Builder that enables customers to build their own widgets.
WebAccess/HMI	Advantech WebAccess/HMI is human-machine interface (HMI) software based on Microsoft's Windows operating system. This software features excellent communication and monitoring capabilities, supports more than 350 PLC communication protocols, and offers a wide choice of screen design objects to satisfy diverse integrations of factory automation and HMI operation and monitoring requirements.

Please note: If some optional modules are offered with the system, additional system certificates may be required in certain regions/countries.
Please contact Advantech for certificate compliance.