AIM-75S

8" Industrial-Grade Tablet with Qualcomm® Snapdragon™ 660 Processor, Android 10 with GMS

Features

- Equipped with DeviceOn/iService software for remote device management
- Qualcomm® Snapdragon™ 660 with Android 10 operating system
- Certified for Google Mobile Services for downloading apps and APIs
- 8" LCD with 400-nit brightness, 1920 x 1200 resolution
- Corning® Gorilla® Glass 3 touchscreen supports gloved and stylus operation
- IP65-rated protection from water and dust and 4-ft drop tolerance
- LTE, WLAN, Bluetooth, NFC, and GIS capabilities
- Optional peripherals include 1D/2D barcode scanner, LAN+COM, UHF RFID, and MSR modules
- Multi-bay charging and docking stations ensure easy installation in diverse environments

DeviceOn/iService Qualcomm SOTI

Introduction

AIM-75S is an industrial-grade tablet equipped with IP65-rated protection from water and dust ingress and a swappable battery that supports up to 12 hours of operation, making it suitable for diverse indoor and outdoor vertical applications. In addition to WLAN/LTE capabilities that enable mobile computing, AIM-75S can be integrated with optional peripherals such as a 1D/2D barcode scanner, LAN+COM, UHF RFID, and MSR modules to support a wide range of operations in the manufacturing, warehouse, retail, and field service industries. Moreover, AIM-75S is equipped with Advantech's DeviceOn/iService software, which is a next-generation unified device management solution based on the WISE-DeviceOn platform. With support for batch operations and multi-device control, DeviceOn/iService enables easy device configuration and deployment for convenient remote device management.

Specifications

System	Processor	Qualcomm® Snapdragon™ 660 octa-core 2.2 GHz
	Memory	4 GB LPDDR4x
	Operating System	Android 10 with GMS
Storage	eMMC	64 GB
	Micro SD	Supports up to 2 TB
Display	Type	8" IPS LCD
	Resolution	WUXGA 1920 x 1200
	Brightness	400 cd/m²
	Touch Type	10-point multi-touch PCAP touch control
	Glass Type	Corning® Gorilla® Glass 3
Communication	WLAN	IEEE 802.11 a/b/g/n/ac/k/v/r
	Bluetooth	Bluetooth® v5.0
	WWAN (Optional)	Global Cat. 4/6 4G LTE (data only)
	NFC	13.56 MHz, compatible with ISO15693, ISO14443A, ISO 14443B, FeliCa
Connectivity	Standard I/O	1 x USB Type-C 3.0 , 1 x combo audio jack, 1 x SIM card reader, 1 x micro SD card reader
	Extended I/O	1 x AIM extension 14-pin pogo connector: 1 x USB 2.0, 1 x 2-wire UART, 5V/1A power
	Docking	1 x AIM docking 16-pin pogo connector: 1 x USB 2.0, 9V power
	Speaker	1 x Internal speakers (1.5W)
GPS	GPS	Glonass/Beidou/Galileo/QZSS/SBAS
Audio	Audio Jack	1 x Audio combo jack (combines stereo audio output and mono microphone input)
Camera	Front	5 megapixel fixed-focus camera
	Rear	8 megapixel auto-focus camera with LED flash
Sensors		Ambient light sensor, P-sensor, e-compass, g-sensor, gyroscope
Control Buttons		1 x Power button, 2 x volume keys (up/down), 1 x programmable function key
System Indicators		Full: green (100%); charging: blue; low charge: red (≤10%)
Power System	Input Voltage	USB Type-C: 5V/3A, 9V/3A Dock pogo: 9V/2A
	Battery	Swappable battery: 4900 mAh (minimum) 18.6 WHr Operating time: up to 12 hrs* Charging time: < 3 hrs*
Environmental	Operating Temperature	-10 ~ 50 °C/14 ~ 122 °F
	Storage Temperature	-20 ~ 60 °C/-4 ~ 140 °F
	IP Rating	IP65
	Shock	SAE J1455
	Vibration	SAE J1455
	Humidity	Operating: 10 ~ 90% @ 40 °C/104 °F non-condensing Storage: -10 ~ 95% non-condensing
	Drop Tested	Up to 120 cm (4 ft) onto plywood
Physical Characteristics	Dimensions (W x D x H)	240 x 142 x 14.5 mm/9.44 x 5.59 x 0.57 in
	Weight	600 g/1.32 lb
	Color	Dark gray
Certifications		FCC, CE, TELEC, NCC, RCM, IC, VCCI, PTCRB, SRRC, CB, UL, CCC, BSMI

*The battery operation duration and recharge time may vary according to different factors such as screen brightness, applications, features, power management, battery condition, and other configurable settings.

Specifications (Cont.)

DeviceOn/iService Remote Device Management	Operating System	Android 10
	Common Controls (Reboot, Shutdown)	V
	Device-Specific Controls (Audio, Backlight)	V
	Connection Status	V
	Hardware Status	V*
	Batch Operation Support	V
	OTA Storage Management	Local blob
	APP OTA Updates	V
	Software Watchlist	V
	Software Start/Stop	V
*Dependant on device model	Peripherals Watchlist	V*

Note: DeviceOn/iService software must be downloaded from the Advantech website at https://www.advantech.com/search/?q=DeviceOn%2FiService&st=support&sst=Utility

Dimensions

Unit: mm

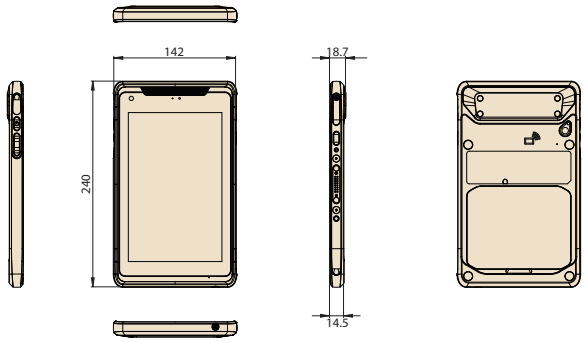

System I/O

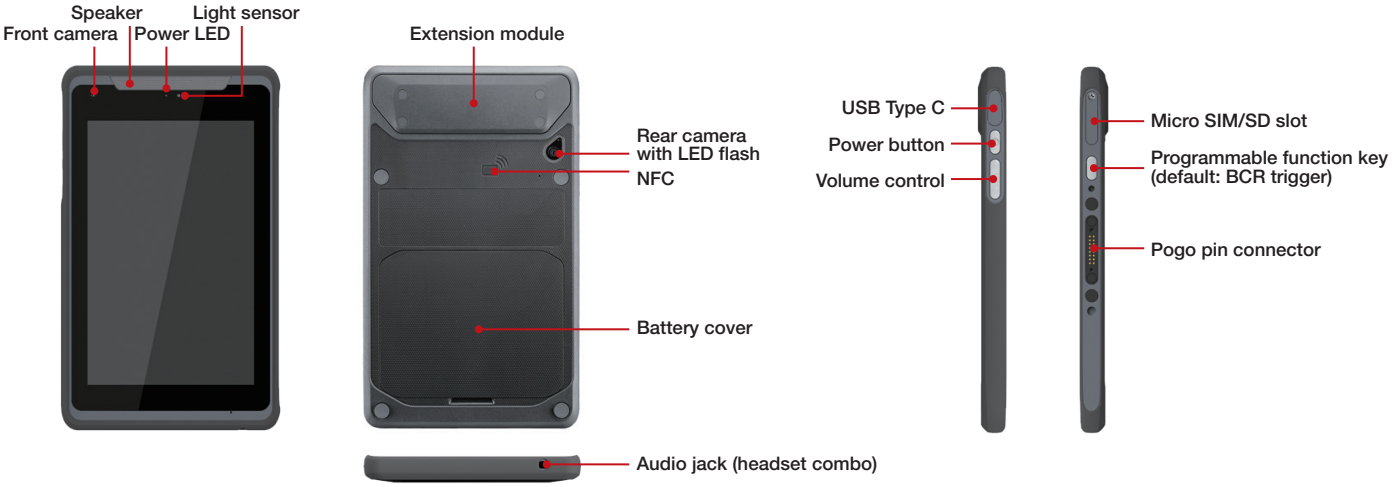

Ordering Information

Part Number	Wi-Fi	LTE	GMS	Applicable Regions / Countries
AIM-75S-211S10	✓		✓	Global (except Europe)
AIM-75S-221S10	✓		✓	Europe (except Turkey and Russia)
AIM-75S-200S10	✓			Global
AIM-75S-311S10	✓	✓	✓	North America
AIM-75S-611S10	✓	✓	✓	Global (except Europe)
AIM-75S-621S10	✓	✓	✓	Europe (except Turkey and Russia)
AIM-75S-300S10	✓	✓		North America
AIM-75S-600S10	✓	✓		Global
AIM-75S-800S10	✓	✓		China

Note: For mandatory regulations by country, refer to page 1.

Optional Accessories

Part Number	Description
AIM-ADP0-0525	ADP 45W 100~240V Type-C PD
1700001524	Power cord (USA) UL 3P 10A 125V 183 cm
1700008921	Power cord (Japan) PSE 3P 7A 125V 183 cm
1700019146	Power cord (China) CCC 3P 10A 250V 183 cm
1700018553	Power cord (NZ/AU) SAA 3P 10A 250V 183 cm
170203180A	Power cord (UK) BSI 3P 10A 250V 183 cm
170203183C	Power cord (EU) 3P 2.5A 250V 183 cm

Note: Power cords are suitable for AIM-75, AIM-VSD, and AIM-MCS.

Packing List

Description
1 x AIM-75 tablet
1 x AC/DC adaptor
1 x Power cord TW

DeviceOn / iService

Unified Remote Device Management Software

Features

- Supports Advantech devices equipped with Windows, Android, and Linux OS
- Flexible device, location, user, and permissions management
- Enables remote monitoring and control of hardware, software, and peripherals
- Supports over-the-air (OTA) firmware and software updates
- Ensures quick, easy, and secure device onboarding
- RESTful APIs for third-party system integration

Introduction

Advantech's DeviceOn/iService is a next-generation unified device management solution based on the WISE-DeviceOn platform. Designed to enable centralized monitoring and remote management, DeviceOn/iService supports Advantech devices equipped with Windows, Linux, or Android operating systems. The software also supports the management of applications and integrated peripherals, such as a barcode scanner, card reader, camera, and printer. Users can remotely access and control connected devices, take screenshots, rollout OTA upgrades, and use remote desktop capabilities for troubleshooting from any location at any time. Moreover, DeviceOn/iService supports batch operations to facilitate the management of multiple devices simultaneously for easy and convenient device configuration and deployment.

Total Management

Devices & Hardware
- Windows, Linux, Android
- Hardware, storage, battery

Software & Peripherals
- Software monitoring & access
- Screens, USB devices, printers

Open for Expansion
- Peripheral integration
- Open APIs for integration

Remote Access

Real-Time Monitoring
- Connection/hardware status
- Software/peripheral status
- Failure notifications

Remote Controls
- Power controls
- Audio, backlight controls
- Software controls

Troubleshooting
- Screenshots
- Remote desktop support

Operational Efficiency

OTA updates
- System/software updates
- File repository management
- App store

Batch Controls
- 1-to-many batch reboot, etc.
- Time-saving tasks

Setup Booster
- Software/peripheral watchlist
- Roles, rule templates

Note: Some functions may vary according to the product

System Architecture

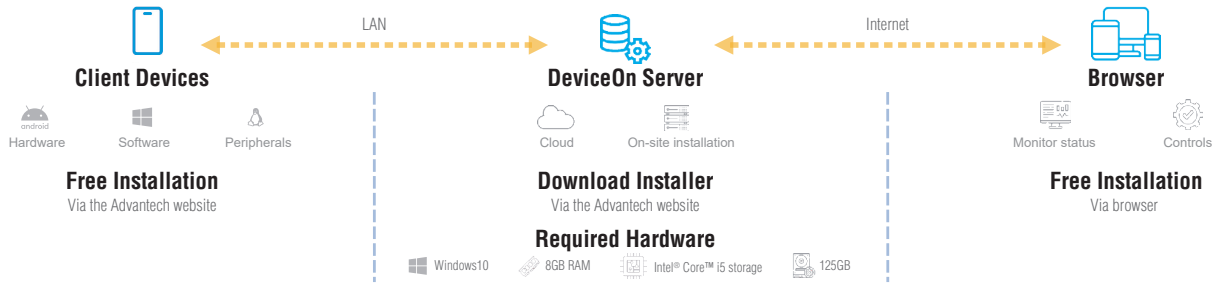

Vehicle Docking Station

Features

- Compatible with 9 ~ 32 V_{DC} in-vehicle power supply
- Rapid single-handed docking and undocking
- Anti-theft locking mechanism
- External GPS antenna
- Programmable function keys
- High-density connector
- Compliant with SAE J1455 for vibration and shock tolerance
- Safe and reliable design for vehicle applications

Specifications

		Fully Configured Unit	Charging Dock Only
I/O	High-Density Connector	1 x CAN bus (supports raw CAN, J1939, OBD-II/ISO 15765) with configurable firmware 5 x Digital inputs 1 x Odometer (supports dry and wet contact) with configurable and switchable firmware (default wet contact) 2 x Digital outputs (supports speed pulse) 1 x RS-232 (4 wire) 1 x RS-232/485 (2 wire) (default RS-485, termination enabled) 1 x USB 2.0 1 x Power output 12V 1A	N/A
GPS	Extended GPS	1 x External GPS antenna	N/A
Function Keys		5 x Programmable function keys	N/A
Key Lock		Anti-theft key lock (key can be removed)	N/A
Power	Input Voltage	Supports 12/24 V vehicle power (9 ~ 32 V_{DC} input range)	
Mechanical	Dimensions (W x D x H)	196 x 76.9 x 212.75 mm/7.71 x 3.02 x 8.37 in	
	Weight	0.5 kg/1.10 lb	
Environmental	Operating Temperature	-10 ~ 50 °C/14 ~ 122 °F (0 ~ 40 °C/32 ~ 104 °F when charging)	
	Storage Temperature	-30 ~ 80 °C/-22 ~ 176 °F	
	IP Rating	IP54	
	Vibration/Shock	SAE J1455	
	Safety	UL, CB, LVD, CCC	
	Vehicle Power Regulation	E-Mark, ISO7637-2	
	Certifications	CE, FCC, CCC	

Ordering Information

Part Number	Description
AIM-VEH7-0000	AIM vehicle docking station (advanced I/O)
AIM-VEH7-0010	AIM vehicle docking station (power only)
1700026766-01	High-density cable
PWS-770-GPSAN00E	External GPS antenna
1700027666-01	Vehicle power cable (In-house engineer testing only)
1700027665-01	Vehicle power cable (vehicle battery)

Packing List

Item	AIM-VEH7-0000	AIM-VEH7-0010
1	1 x Vehicle dock (advanced I/O)	1 x Vehicle dock (power only)
2	1 x Vehicle power cable (vehicle battery)	1 x Vehicle power cable (vehicle battery)

Optional Accessory

Part Number	Description
RAM-MOUNT-07E	AMPS mount w/VESA base, 1.5" ball

Dimensions

Unit: mm

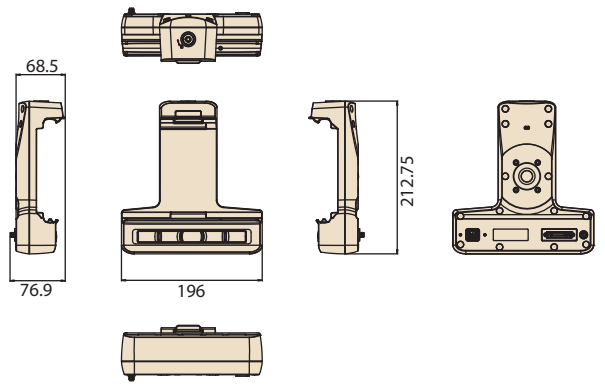

Office/VESA Docking Station

Features

- 9 ~ 32 V wide input voltage range
- VESA (75 x 75 mm) compliant docking stations
- -10 ~ 50 °C/14 ~122 °F operating temperature
- Reliable docking connector for diverse applications

Specifications

		Office Docking Station (full I/O configuration)	Office Docking Station (basic configuration)	VESA Docking Station (full I/O configuration)	VESA Docking Station (USB)
I/O		2 x USB 3.0 1 x RS-232 COM 1 x Gigabit LAN 1 x Power jack	2 x USB 2.0 1 x Power jack	2 x USB 3.0 1 x RS-232 COM 1 x Gigabit LAN 1 x Power jack	2 x USB 2.0 1 x Power jack
Stand		SECC steel	SECC steel	N/A	N/A
Power	Input Voltage	9 ~ 32 V	19 V	9 ~ 32 V	19 V
Mechanical	Dimensions (W x D x H)	215 x 174.29 x 260.69 mm/ 8.5 x 6.9 x 10.3 in	215 x 174.29 x 260.69 mm/ 8.5 x 6.9 x 10.3 in	160 x 61.8 x 189.2 mm/ 6.3 x 2.4 x 7.4 in	160 x 61.8 x 189.2 mm/ 6.3 x 2.4 x 7.4 in
	Weight	0.75 kg/1.65 lb	0.748 kg/1.64 lb	0.282 kg/0.62 lb	0.28 kg/0.61 lb
Environmental	Operating Temperature	-10 ~ 50 °C/14 ~122 °F			
	Storage Temperature	-20 ~ 70 °C/-4 ~ 158 °F			
	Safety	UL, CB, LVD, CCC			
	Certifications	CE, FCC, CCC			

Dimensions

Unit: mm

Office Docking Station

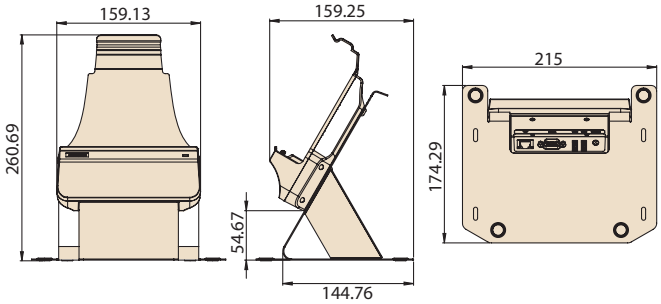

VESA Advanced/Basic Docking Station

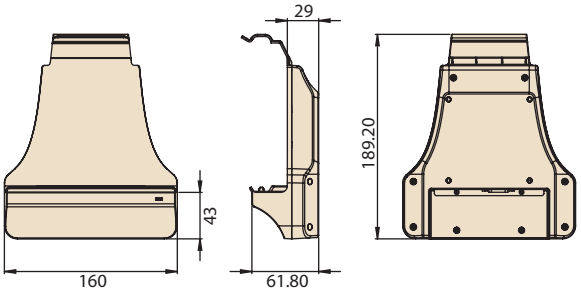

Ordering Information

Part Number	Description
AIM-OFD0-0170	AIM 8 advanced office docking station (full I/O configuration)
AIM-OFD0-0171	AIM 8 office docking station (USB)
AIM-VSD0-0170	AIM 8 advanced VESA docking station (Full I/O configuration)
AIM-VSD0-0171	AIM 8 VESA docking station with USB (USB)
AIM-STD0-0000	AIM 8 VESA stand

Packing List

Item	AIM-OFD0-0170	AIM-OFD0-0171
1	1 x Office dock (full I/O configuration)	1 x Office dock (USB)
2	1 x AC/DC adaptor	1 x AC/DC adaptor
Item	**AIM-VSD0-0170**	**AIM-VSD0-0171**
1	1 x VESA dock (full I/O configuration)	1 x VESA dock (USB)
2	1 x AC/DC adaptor	1 x AC/DC adaptor

Note: This product does not include a power cable. Please order a power cable using the part number according to your usage requirements.

Optional Accessories

Part Number	Description
96PSA-A65W19V1-3	ADP A/D 100-240V 65W 19V C6 DC PLUG 180° 62368
1700001524	Power cord (USA) UL 3P 10A 125V 183 cm
1700008921	Power cord (Japan) PSE 3P 7A 125V 183 cm
1700019146	Power cord (China) CCC 3P 10A 250V 183 cm
1700018553	Power cord (NZ/AU) SAA 3P 10A 250V 183 cm
170203180A	Power cord (UK) BSI 3P 10A 250V 183 cm
170203183C	Power cord (EU) 3P 2.5A 250V 183 cm

AIM Multi-Bay Charging Station

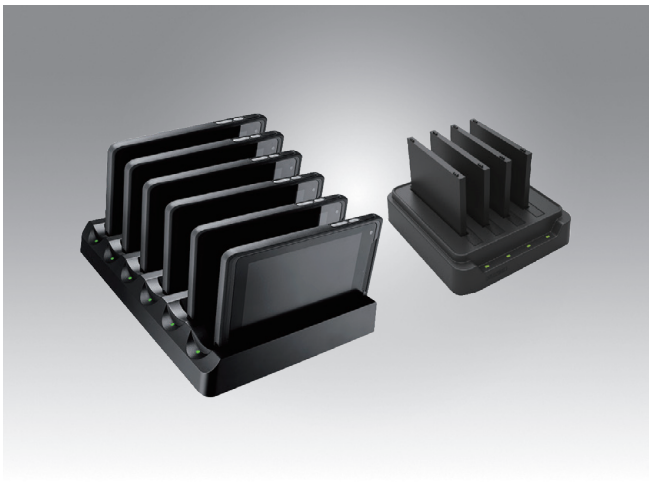

Features

- Can charge up to 6 tablets/4 batteries simultaneously
- Overcurrent and overvoltage protection provided
- Rapid single-handed docking and undocking
- LED indicators for monitoring charging status

Specifications

		Multi-Tablet Charging Station	Multi-Battery Charging Station
Capacity	Number of Bays	6	4
Power	Charging Current	2A	2.5A
	Charging Voltage	9 V	4.35 V
	Input Voltage	19 V	19 V
LED Indicators		Green: Full Amber: Charging Red: Error	Green: Full Amber: Charging Red: Error
Mechanical	Dimensions (W x D x H)	387 x 269 x 49 mm/15.23 x 10.59 x 1.92 in	144 x 155 x 39 mm/5.66 x 6.10 x 1.53 in
	Weight	1.98 kg/4.36 lb	0.48 kg/1.05 lb
Environmental	Operating Temperature	0 ~ 40 °C/32 ~ 104 °F	0 ~ 40 °C/32 ~ 104 °F
	Storage Temperature	-10 ~ 50 °C/14 ~ 122 °F	-10 ~ 50 °C/14 ~ 122 °F
	Safety	UL, CB, LVD, CCC, RCM	UL, CB, LVD, CCC, RCM
	Certifications	CE, FCC, CCC, RCM, BSMI	CE, FCC, CCC, RCM, BSMI

Dimensions

Unit: mm

Multi-Tablet Charging Station

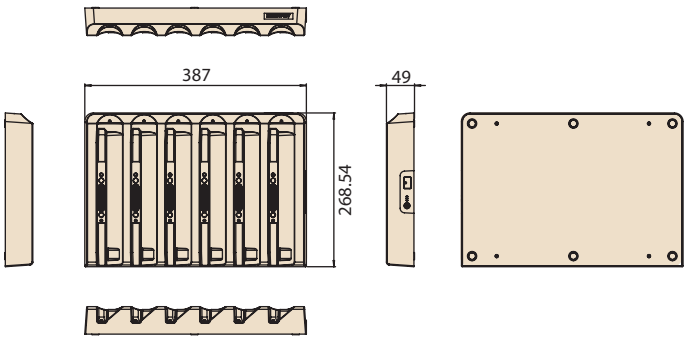

Multi-Battery Charging Station

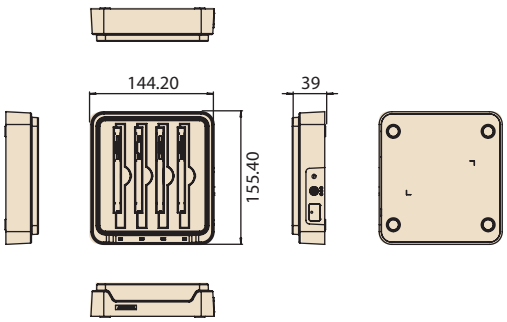

Ordering Information

Part Number	Description
AIM-CHG0-0150	Multi-tablet charging station for AIM
AIM-MBC0-0051	Multi-battery charging station for AIM

Packing List

Item	AIM-MBC0-0051
1	1 x Multi-battery charging station
2	1 x AC/DC adaptor

Note: This product does not include a power cable. Please order a power cable using the part number according to your usage requirements.

Optional Adapter

Model	Adapter Part Number	Description
AIM-CHG0-0150	XAIM-GST120A20-P1M	ADP A/D 100-240V 120W 20V DC Plug
AIM-MBC0-0051	96PSA-A65W19V1-3	ADP A/D 100-240V 65W 19V C6 DC PLUG 180° 62368

Optional Power Cable

Part Number	Description
1700001524	Power cord (USA) UL 3P 10A 125V 183 cm
1700008921	Power cord (Japan) PSE 3P 7A 125V 183 cm
1700019146	Power cord (China) CCC 3P 10A 250V 183 cm
1700018553	Power cord (NZ/AU) SAA 3P 10A 250V 183 cm
170203180A	Power cord (UK) BSI 3P 10A 250V 183 cm
170203183C	Power cord (EU) 3P 2.5A 250V 183 cm

Peripherals and Accessories

Extension Modules

	Barcode scanner (20°)	Barcode scanner (70°)	MSR + barcode scanner module	MSR module
Part Number	**AIM-EXT0-0040**	**AIM-EXT0-0041**	**AIM-P521A0**	**AIM-P521B0**
Features	▪ Sensor: 640 x 480 CMOS sensor ▪ Illumination/Aimer: white LED illumination/red LED dot aimer ▪ Frame rate: 30 fps ▪ Field of view: horizontal: 37.8°; vertical: 28.8°	▪ Sensor: 640 x 480 CMOS sensor ▪ Illumination/Aimer: white LED illumination/red LED dot aimer ▪ Frame rate: 30 fps ▪ Field of view: horizontal: 37.8°; vertical: 28.8°	**MSR** ▪ Swipe Speed: 3 ~ 75 in/sec ▪ Supported Format: ISO 7811/ JIS II bi-directional swipe **Barcode Scanner** ▪ Sensor: 640 x 480 CMOS sensor ▪ Illumination/Aimer: white LED illumination/red LED dot aimer ▪ Frame rate: 30 fps ▪ Field of view: horizontal: 37.8°; vertical: 28.8°	▪ Swipe Speed: 3 ~ 75 in/sec ▪ Supported Format: ISO 7811/ JIS II bi-directional swipe
Dimensions	130.2 x 38.7 x 27.8 mm/ 5.12 x 1.52 x 1.09 in	130.2 x 38.7 x 32 mm/ 5.12 x 1.52 x 1.25 in	130.2 x 68.84 x 80 mm/ 5.12 x 2.71 x 3.15 in	130.2 x 68.84 x 80 mm/ 5.12 x 2.71 x 3.15 in
Weight	0.042 kg/0.092 lb	0.042 kg/0.092 lb	100 g/0.22 lb	82 g/0.18 lb

	LAN + COM module	LAN RJ-45 module	UHF RFID reader	UHF RFID reader	UHF RFID reader (flat type)
Part Number	**AIM-EXT0-0046**	**AIM-P531A0**	**AIM-EXT0-0047**	**AIM-EXT0-0049**	**AIM-EXT0-0050**
Features	1 x 10/100 Ethernet port 1 x COM port	1 x 10/100 Ethernet port	▪ RFID output: 25W ▪ Antenna type: Linear polarization ▪ Frequency: EU: 867 ~ 869 MHz ▪ Supported tag standard: EPC Class 2, Gen. 2/ ISO 18000-6C	▪ RFID output: 25W ▪ Antenna type: Linear polarization ▪ Frequency: US: 913 ~ 917 MHz ▪ Supported tag standard: EPC Class 2, Gen. 2/ ISO 18000-6C	▪ RFID output: 25W ▪ Antenna type: Linear polarization ▪ Frequency: EU: 867 ~ 869 MHz ▪ Supported tag standard: EPC Class 2, Gen. 2/ ISO 18000-6C
Dimensions	130.2 x 70 x 29 mm/ 5.12 x 2.75 x 1.14 in	130 x 38.7 x 31 mm 5.12 x 1.52x1.22 in	130.2 x 63.8 x 79.40 mm/ 5.12 x 2.5 x 3.13 in	130.2 x 63.8 x 79.40 mm/ 5.12 x 2.5 x 3.13 in	130.2 x 110.75 x 82.51 mm/ 5.12 x 4.35 x 3.25 in
Weight	0.078 kg/0.171 lb	0.044 kg / 0.097 lb	0.08 kg/0.176 lb	0.08 kg/0.176 lb	160 g/0.352 lb

Basic Docking Station

Simple charger

Part Number	AIM-P508A0
Features	1 x Micro USB charging port Micro USB 18W adapter/power cord are optional, Adapter PN: XAIM-A16-018N1A Power cord PN: refer to page 2 1 x USB 2.0
Dimensions	180 x 140 x 120 mm/7.08 x 5.51 x 4.72 in
Weight	450 g/0.99 lb

Accessories

Hand strap

Shoulder strap

360° rotatable hand strap

AIM8" rugged case

Part Number	AIM-SRP0-0000	AIM-SRP0-0001	AIM-SRP0-0004	AIM-SRP0-0005
Features	1 x Black strap 1 x Stylus holder	1 x Black strap 1 x Stylus holder	1 x Black strap that supports 360° rotation	1 x Black rugged case Enhance drop tolerance to 1.8M
Dimensions	240 x 20 mm/ 9.44 x 0.78 in	380 x 135 x 20 mm/ 14.96 x 5.31 x 0.78 in	160 x 160 mm/ 6.3 x 6.3 in	244.08 x 149.2 x 20.59mm / 9.6 x 5.87 x 0.81 in
Weight	0.022 kg/0.048 lb	0.05 kg/0.11 lb	158 g/0.35 lb	57g /0.125 lb

Battery with meter

Active stylus

AIM8 AG+AR screen protection film

Holster

Part Number	AIM-BAT0-0252	AIM-P705	AIM-EXT0-0181	AIM-HOL0-0160
Features	1 x Black battery	1 x Silver stylus pen	Surface Hardness: 2 ~ 3H Reflection Rate: 0.15% Haze: 15%	1 x Black holster
Dimensions	98 x 84.5 x 6.5 mm/ 3.85 x 3.32 x 0.25 in	140 x 9.7 mm/ 5.51 x 0.38 in	212 x 128 x 0.15 mm/ 8.35 x 5.04 x 0.006 in	250 x 150 x 30 mm/ 9.84 x 5.9 x 1.18 in
Weight	0.104 kg/0.229 lb	0.02 kg/0.044 lb	0.009 kg/0.02 lb	0.23 kg/0.5 lb