AIM-75H

8" Medical-Grade Tablet with Qualcomm® Snapdragon™ 660 Processor and PCAP Touchscreen

DeviceOn/iService QUALCOMM

Features

- Qualcomm® Snapdragon™ 660 processor with Android 10 and GMS certification
- 8" industrial-grade LCD with 1920x1200 resolution, 400-nit brightness, and up to 12,000 hours MTBF
- Projected capacitive touchscreen with scratch-resistant Corning® Gorilla® Glass
- Supports active stylus pen and gloved operation for increased usability
- IP65-rated protection from water and dust ingress
- 4-ft drop tolerance
- Fast roaming and dual-band WLAN, BT 5.0, NFC, 3G/ 4G LTE connectivity for seamless communications
- Optional peripherals include a 1D/2D barcode scanner, LAN+COM module, and UHF RFID module
- Lightweight design and multi-tablet docking station supports deployment in diverse environments
- Equipped with DeviceOn/iService software for remote device management

Introduction

AIM-75H is an 8" medical-grade tablet that features a projected capacitive touchscreen, IP65-rated ingress protection, and Android 10 operating system. Aimed at healthcare applications, AIM-75H can be equipped with optional extension modules and peripherals that enable seamless communication and unlimited mobility for diverse usage scenarios.

Moreover, AIM-75H is equipped with Advantech's DeviceOn/iService software, which is a next-generation unified device management solution based on the WISE-DeviceOn platform. With support for batch operations and multi-device control, DeviceOn/iService enables easy device configuration and deployment for convenient remote device management.

Specifications

System	Processor	Qualcomm SDA660 (up to 2.2GHz)
	Memory	4 GB LPDDR4X
	OS	Android 10 with GMS certification
Storage	eMMC	64 GB
	Micro-SD	Up to 2 TB
Display	Type	8" IPS LCD
	Resolution	WUXGA 1920 x 1200
	Brightness	400 cd/m²
	Touch Type	10-point, multi-touch projected capacitive
	Glass Type	Corning® Gorilla® Glass 3
Communication	WLAN	IEEE 802.11 a/b/g/n/ac/k/v/r
	Bluetooth	Bluetooth® v5.0 + BLE
	NFC	13.56 MHz, compatible with ISO15693, ISO14443A, ISO 14443B, FeliCa
Connectivity	Standard I/O	1 x USB Type-C 3.0 , 1 x combo audio jack, 1 x SIM card reader, 1 x micro SD card reader
	Extended I/O	1 x AIM extension 14-pin pogo connector: 1 x USB 2.0, 1 x 2-wire UART, 5V/1A power
	Docking	1 x AIM dock 16-pin pogo connector: 1 x USB 2.0, 9V power
	GPS	Glonass/Beidou/Galileo/QZSS/SBAS
Audio	Speaker	1 x Internal speakers (1.5W)
	Audio Jack	1 x Audio combo jack (combines stereo audio output and mono microphone input)
Camera	Front	5.0-megapixel fixed-focus camera
	Rear	8.0-megapixel aufo-focus camera with LED flash
Sensors		Ambient light sensor, e-compass, g-sensor, gyroscope
Control Buttons		1 x Power button, 2 x volume keys (up/down), 1 x programmable function key
Battery Capacity Indicators		Green: full (100%); blue: charging; red: low (≤10%)
Power	Input Voltage	USB Type-C: 5V/3A, 9V/2A Dock pogo: 9V/2A
	Battery	Swappable battery: 4900mAh @ 3.8V_{DC} (18.62 WHr) Operating time: Up to 12 hours* Charging time: < 3 hours*
Environment	Operating Temperature	0 ~ 35 °C/32 ~ 95 °F
	Storage Temperature	-20 ~ 60 °C/-4 ~ 140 °F
	IP Rating	IP65
	Shock	SAE J1455
	Vibration	SAE J1455
	Humidity	Operating: 10 ~ 90% @ 40 °C non-condensing
		Storage: -10 ~ 95% non-condensing
	Drop Tested	Up to 120 cm/4 ft onto plywood
Physical Characteristics	Dimensions (W x D x H)	240 x 142 x 14.5 mm/9.44 x 5.59 x 0.57 in
	Weight	600 g/1.32 lb
	Color	White/blue
Certifications		IEC/UL/EN 60601-1, UL/CB 62368 , FCC, CE, NCC/BSMI, TELEC/VCCI, RCM, IC, CCC/SRRC, EN1789

*The battery duration and recharge time can vary depending on different factors, such as screen brightness, applications, features, power management, battery condition, and other configurable settings.

Dimensions

Unit: mm

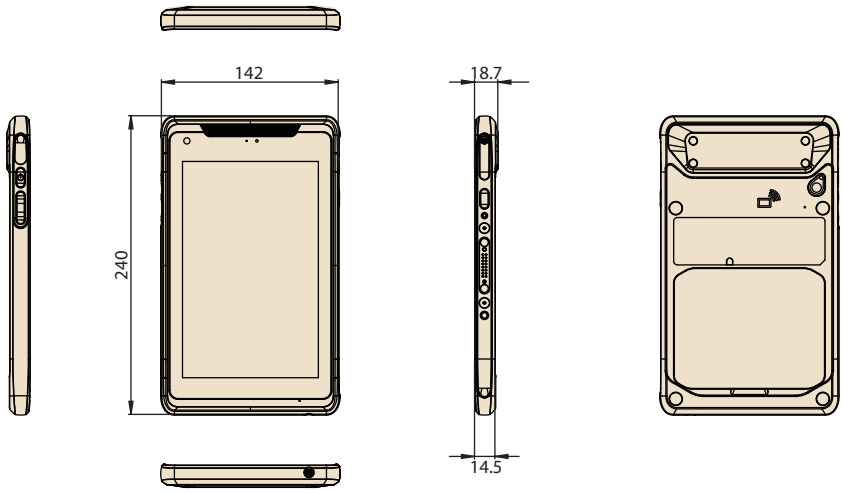

System Layout

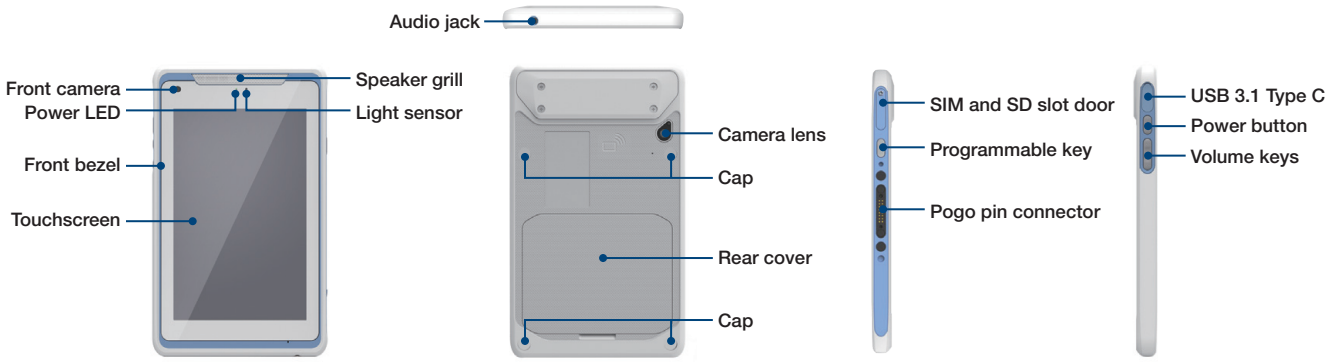

Ordering Information

Part Number	Wi-Fi	GMS	Applicable Regions/Countries
AIM-75H-211S10	✓	✓	Global (excluding Europe)
AIM-75H-221S10	✓	✓	Europe (excluding Turkey and Russia)
AIM-75H-200S10	✓		Global

Packing List

Description
1 x AIM-75H tablet
1 x AC adaptor
1 x power cable (US)

Peripheral Ordering Information

Part Number	Description
1702002600	Power Cord UL 3P 10A 125V 183cm (USA)
1700000237	Power Cord PSE 3P 12A 125V 183cm (Japan)
1700000596-11	Power Cord CCC 3P 10A 250V 183cm (China)
1702031836	Power Cord SAA 3P 10A 250V 183cm (NZ/AU)
1700018704	Power Cord BSI 3P 10A 250V 180cm (UK)
1702002605	Power Cord EU 3P 10A 250V 183cm 90°(EU)

DeviceOn / iService

Unified Remote Device Management Software

Features

- Supports Advantech devices equipped with Windows, Android, and Linux OS
- Flexible device, location, user, and permissions management
- Enables remote monitoring and control of hardware, software, and peripherals
- Supports over-the-air (OTA) firmware and software updates
- Ensures quick, easy, and secure device onboarding
- RESTful APIs for third-party system integration

Specifications and Versions

	Android
Version	10
Common controls: reboot, shutdown	V
Device-specific controls: audio control, backlight control	V
Connection status	V
Hardware status	V*
Task for batch operations	V
OTA storage management	Local blob
APP OTA Updates	V
Software watchlist	V
Software start/stop	V
Peripheral watchlist	V*

*Refer to the Advantech support list

System Architecture

AIM-75H Office/VESA Docking Station

CE FCC

Features

- 9 ~ 32 V input voltage range
- VESA (75 x 75 mm) compliant docking station
- -10 ~ 50 °C/14 ~122 °F operating temperature
- Reliable docking connector for office applications

Specifications

		Advanced VESA Docking Station	Basic VESA Docking Station
I/O		2 x USB 3.0 1 x RS-232 COM 1 x Gigabit LAN 1 x Power jack	2 x USB 2.0 1 x Power jack
Stand		-	-
Power	Input Voltage	9 ~ 32 V	19 V
Mechanical	Dimensions (W x D x H)	160 x 61.8 x 189.2 mm/6.3 x 2.4 x 7.4 in	160 x 61.8 x 189.2 mm/6.3 x 2.4 x 7.4 in
	Weight	0.282 kg/0.62 lb	0.28 kg/0.61 lb
Environment	Operating Temperature	-10 ~ 50 °C/14 ~ 122 °F	-10 ~ 50 °C/14 ~ 122 °F
	Storage Temperature	-20 ~ 70 °C/-4 ~ 158 °F	-20 ~ 70 °C/-4 ~ 158 °F
	Safety	UL, CB, LVD, CCC	UL, CB, LVD, CCC
	Certifications	CE, FCC, CCC	CE, FCC, CCC

Dimensions

Unit: mm

Advanced/Basic VESA Docking Station

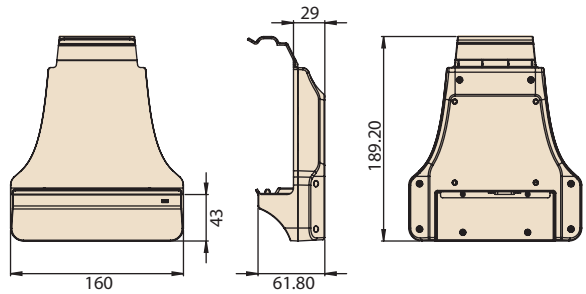

VESA Dock Stand

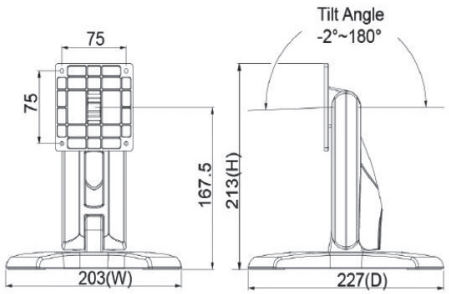

Ordering Information

Part Number	Description
AIM-VSD0-0001	AIM 8 advanced VESA docking station (full I/O)
AIM-VSD0-0003	AIM 8 basic VESA docking station (USB and charger only)
HIT-STD-W001-C	AIM 8 VESA stand

Packing List

Item	AIM-VSD0-0001	AIM-VSD0-0003
1	1 x VESA dock with full I/O	1 x VESA dock (USB and charger only)
2	1 x AC/DC adaptor	1 x AC/DC adaptor

Note: The above products do not include a power cable. Customers must order them separately for the specific country of use.

Optional Accessories

Part Number	Description
96PSA-A65W19V1-3	Adaptor A/D 100-240V 65W 19V C6 DC PLUG 180° 62368
1700001524	Power cable, UL, 3P, 10A, 125V, 180 cm (US)
1700008921	Power cable, PSE, 3P, 7A, 125V, 183 cm (Japan)
1700019146	Power cable, CCC, 3P, 10A, 125V, 183 cm (China)
1700018553	Power cable, SAA, 3P, 2.5A, 250V, 183 cm (Australia/NZ)
170203180A	Power cable, BSI, 3P, 2.5A, 250V, 183 cm (UK)
170203183C	Power cable, CE, 3P, 10A, 250V, 183 cm (EU)

AIM-75H Multi-Bay Charging Station

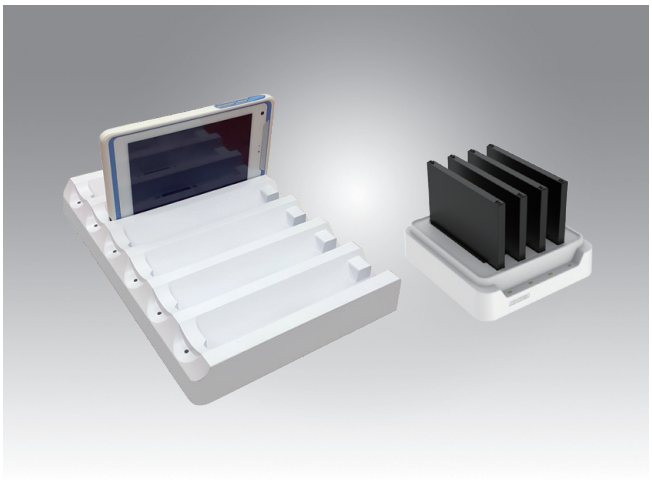

Features

- Supports charging of up to 6 tablets/4 batteries simultaneously
- Overcurrent and overvoltage protection provided
- Rapid single-handed docking and undocking
- LED indicators for monitoring charging status

Specifications

		Multi-Tablet Charging Station	Multi-Battery Charging Station
Capacity	Number of Bays	6	4
Power	Charging Current	2A	2.5A
	Charging Voltage	9 V	4.35 V
	Input Voltage	19 V	19 V
LED Indicators		Green: full Amber: charging Red: error	Green: full Amber: charging Red: error
Mechanical	Dimensions (W x D x H)	387 x 269 x 49 mm/15.23 x 10.59 x 1.92 in	144 x 155 x 39 mm/5.66 x 6.10 x 1.53 in
	Weight	1.98 kg/4.36 lb	0.48 kg/1.05 lb
Environment	Operating Temperature	0 ~ 40 °C/32 ~ 104 °F	0 ~ 40 °C/32 ~ 104 °F
	Storage Temperature	-10 ~ 50 °C/14 ~ 122 °F	-10 ~ 50 °C/14 ~ 122 °F
	Safety	UL, CB, LVD, CCC, RCM	UL, CB, LVD, CCC, RCM
	Certifications	CE, FCC, CCC, RCM, BSMI	CE, FCC, CCC, RCM, BSMI

Dimensions

Unit: mm

Multi-Tablet Charging Station

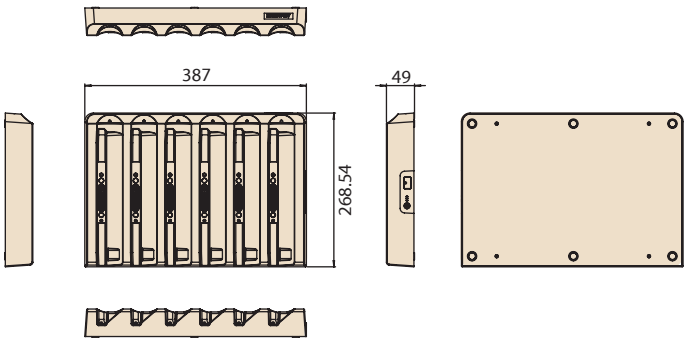

Multi-Battery Charging Station

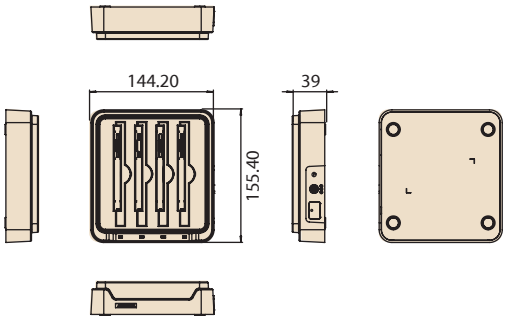

Ordering Information

Part Number	Description
AIM-MTCS-0001	Multi-tablet charging station for AIM
AIM-MBCS-0001	Multi-battery charging station for AIM

Optional Adapter

Model	Part Number	Description
AIM-MTCS-0001	96PSA-A120W19V1	Adaptor A/D 100 ~ 240V, 120W, 19V, C6 DC jack
AIM-MBCS-0001	96PSA-A65W19V1-3	Adaptor A/D 100 ~ 240V, 65W, 19V, C6 DC plug 180° 62368

Packing List

Item	AIM-MTCS-0001	AIM-MBCS-0001
1	1 x Multi-tablet charging station	1 x Multi-battery charging station
2	1 x AC/DC adaptor	1 x AC/DC adaptor

Note: The above products do not include a power cable. Customers must order them separately for the specific country of use.

Optional Power Cord

Part Number	Description
1700001524	Power cable, UL, 3P, 10A, 125V, 180 cm (US)
1700008921	Power cable, PSE, 3P, 7A, 125V, 183 cm (Japan)
1700019146	Power cable, CCC, 3P, 10A, 125V, 183 cm (China)
1700018553	Power cable, SAA, 3P, 2.5A, 250V, 183 cm (Australia/NZ)
170203180A	Power cable, BSI, 3P, 2.5A, 250V, 183 cm (UK)
170203183C	Power cable, CE, 3P, 10A, 250V, 183 cm (EU)

AIM-75H Peripherals and Accessories

Extension Modules

Barcode scanner (20°)

Barcode scanner (70°)

LAN + COM module

Part Number	AIM-BCRS-0020	AIM-BCRS-0070	AIM-LANC-0001
Features	▪ Sensor: 640 x 480 CMOS sensor ▪ Illumination/Aimer: white LED illumination/ red LED dot aimer ▪ Frame rate: 30 fps ▪ Field of view: horizontal: 37.8°; vertical: 28.8°	▪ Sensor: 640 x 480 CMOS sensor ▪ Illumination/Aimer: white LED illumination/ red LED dot aimer ▪ Frame rate: 30 fps ▪ Field of view: horizontal: 37.8°; vertical: 28.8°	1 x 10/100 Ethernet port 1 x COM port
Dimensions	130.2 x 38.7 x 27.8 mm/5.12 x 1.52 x 1.09 in	130.2 x 38.7 x 32 mm/5.12 x 1.52 x 1.25 in	130.2 x 70 x 29 mm/5.12 x 2.75 x 1.14 in
Weight	0.042 kg/0.092 lb	0.042 kg/0.092 lb	0.078 kg/0.171 lb

Accessories

Hand strap

Stylus holder

Shoulder strap (portrait)

Shoulder strap (landscape)

Battery with meter

Part Number	AIM-SRP0-0000	AIM-SRP0-0001	AIM-SRP0-0002	AIM-BAT0-0252
Features	1 x Black strap 1 x Stylus holder	1 x Black strap 1 x Stylus holder	1 x Black strap 1 x Stylus holder	1 x Black battery with meter
Dimensions	240 x 20 mm/ 9.44 x 0.78 in	380 x 135 x 20 mm/ 14.96 x 5.31 x 0.78 in	1820 x 20 mm/ 71.65 x 0.78 in	120 x 87 x 7.5 mm/ 4.72 x 3.43 x 0.30 in
Weight	0.022 kg/0.048 lb	0.05 kg/0.11 lb	0.05 kg/0.11 lb	0.147 kg/0.324 lb

Active stylus

Part Number	AIM-P705
Features	1 x Black stylus pen
Dimensions	140 x 9.7 mm/5.51 x 0.38 in
Weight	0.02 kg/0.044 lb