# Accessories

## ADAM-3940

**40-pin Wiring Board with LED**

### Features

- DIN-rail wiring board
- Dimensions (W x L x H): 160 x 50 x 43 mm (6.3" x 2" x 1.7")
- 40-pin box header connector
- LED indicators

**To Be Used With**

AMAX-2241, AMAX-2242, AMAX-2243

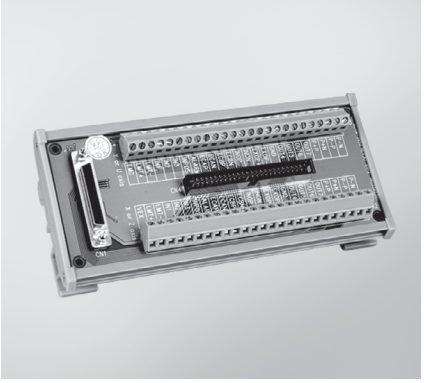

## ADAM-3952

**50-pin SCSI and IDC DIN-rail Wiring Board**

### Features

- DIN-rail wiring board
- Dimensions (W x L x H): 77.5 x 179.5 x 41.5 mm (3.1" x 7.1" x 1.6")
- 50-pin SCSI and IDC connectors

**To Be Used With**

PCI-1220U, PCI-1240U, PCI-1245, PCI-1245E, PCI-1245L, PCI-1265, PEC-3240

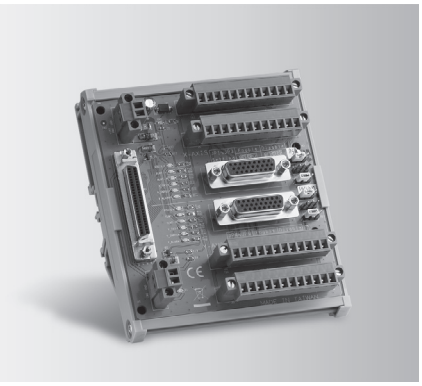

## ADAM-3955

**50-pin SCSI DIN-rail Motion Wiring Board**

### Features

- DIN-rail wiring board
- Dimensions (W x L x H): 103 x 120 x 45 mm (4.12" x 4.8" x 1.8")
- DB-26 and connector
- LED indicators

**To Be Used With**

PCI-1220U, PCI-1240U, PCI-1245, PCI-1245E, PCI-1245L, PCI-1265, PEC-3240

关注 研伟科技 15322[illegible]500

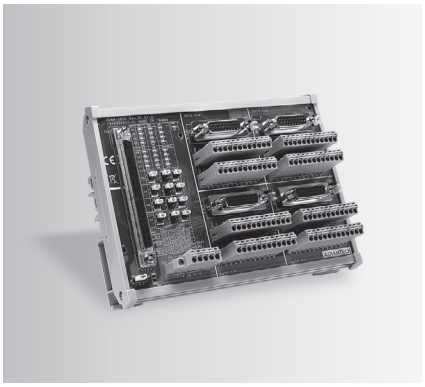

## ADAM-3956

**100-pin SCSI DIN-rail Motion Wiring Board**

### Features

- DIN-rail wiring board
- Dimensions (W x L x H): 122 x 171 x 45 mm (4.8" x 6.73" x 1.77")
- DB-26 and connector
- LED indicators

**To Be Used With**

PCI-1220U, PCI-1240U, PCI-1245 series, PCI-1245L , PCI-1274, PCI-1265, PCI-1285 series, MVP-3245, MAS-3245

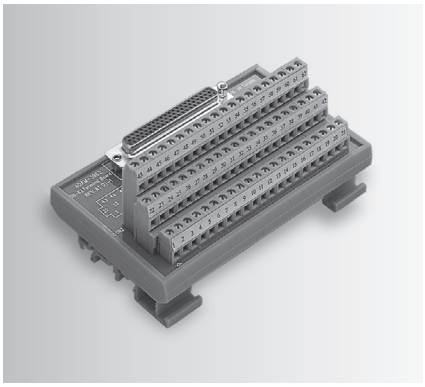

## ADAM-3962

**DB62 DIN-rail Wiring Board**

### Features

- Low cost universal DIN-rail mounting screw terminal module with DB62 female connector
- Screw-clamp terminal blocks allow easy and reliable connections
- Case dimensions (W x L x H): 77.5 x 124.5 x 63.5 mm (3.1" x 4.9" x 2.5")

**To Be Used With**

PCI-1243U

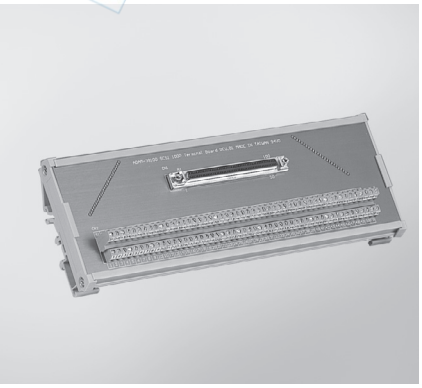

## ADAM-39100

**100-pin DIN-rail SCSI Wiring Board**

### Features

- Low cost universal DIN-rail mounting screw terminal module for industrial applications with 100-pin SCSI female connector
- Dimensions (W x L x H): 80 x 230 x 42 mm (3.14" x 9.05" x 1.65")

**To Be Used With**

PCI-1240U, PCI-1245, PCI-1245E, PCI-1245L, PCI-1265, PCI-1285, PCI-1285E, PCIE-1756, PCI-1756



All product specifications are subject to change without notice.