MIO-5373

8th Gen. Intel® Core™ i7/i5/i3/Celeron* U-Series 3.5" SBC w/ MIOe

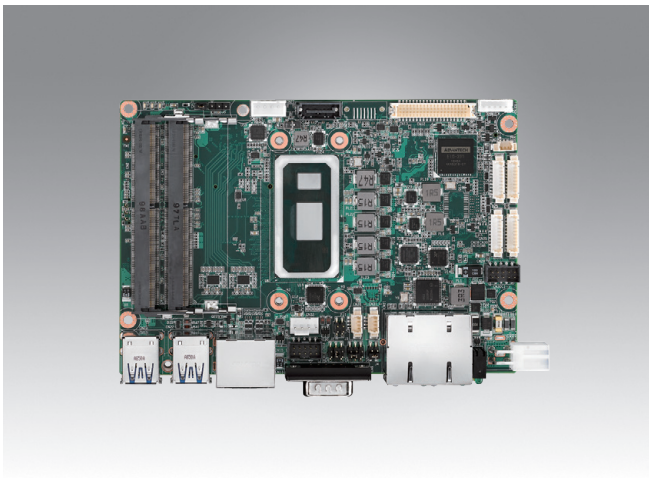

Features

- 8th Gen. Intel® Core™ Processor with Quad/Dual Cores, TDP 15W
- Dual Channel DDR4-2400 up to 32GB, onboard eMMC up to 64GB
- Triple simultaneous displays by 48-bit LVDS/eDP+HDMI+DP
- 2 GbE, 4 USB3.1, CAN Bus, M.2 B-Key 2280 supports NVMe, DC-in 12-24V
- iManager & SW APIs, WISE-PaaS/DeviceOn

Software APIs: GPIO, SMBus/I²C, Watch Dog Timer, Backlight On/Off, Brightness, Hardware Monitor, System Throttling, Thermal Protection

ubuntu yocto PROJECT Windows10 iManager WISE-DeviceOn CE FC

Specifications

Platform	Processor	i7-8665UE	i5-8365UE	i3-8145UE	Celeron® 4305UE (by request)
	Max. Frequency	4.40 GHz	4.10 GHz	3.90 GHz	-
	Base Frequency	1.70 GHz	1.60 GHz	2.20 GHz	2.00 Ghz
	Core/Tread	4/8	4/8	2/4	2/2
	LLC	8MB	6MB	2MB	2MB
	CPU TDP	15W	15W	15W	15W
	Chipset	Intel® 300 Series Chipset (SoC Integrated)			
	BIOS	AMI UEFI 256Mbit			
Memory	Technology	DDR4-2400	DDR4-2400	DDR4-2400	DDR4-2133
	Max. Capacity	32GB			
	Channel/Socket	Dual Channel/Dual Socket DDR4			
	ECC Support	N/A			
Graphics	Controller	Intel UHD GFx 620	Intel UHD GFx 620	Intel UHD GFx 620	Intel UHD GFx 610
	Max. Frequency	1.15 GHz	1.05 GHz	1.00GHz	1.00 GHz
	Base Frequency	300 MHz	300 MHz	300 MHz	300 MHz
	3D/HW Acceleration	3D Acceleration: Direct3D 2015, OpenGL4.5, OpenCL2.1 HW Decode: HEVC/H.265 (8/10-bit), AVC/H.264, VP9, VP8, WMV9, MPEG2 HW Encode: HEVC/H/264, AVC/H/264, VP9, VP8, MPEG2			
Display I/F	LCD	LVDS Dual Channel 48-bit up to 1920 x 1200 Option eDP1.4 up to 4096x2304@60Hz			
	HDMI/DP	1 Port HDMI1.4 up to 4096x2160@30/24Hz 1 Port DP1.2 up to 4096x2306@60Hz			
	Multiple Display	Triple simultaneous displays by LVDS/eDP+HDMI+DP			
Ethernet	Controller	LAN1: Intel i219, LAN2: Intel i210			
	Speed	10/100/1000 Mbps			
External I/O	Ethernet	2 x RJ-45			
	VGA/HDMI/DP	1 x HDMI, 1 x DP			
	USB3.1	4			
	COM Port	1 x RS-232/422/485			
	LED	Power status, HDD R/W			
	Power DC-Jack	1*(Optional)			
Internal I/O	SATA	1, up to 6Gb/s (600MB/s); Support 2 SATA by optional			
	USB2.0	2			
	Serial Bus	SMBus, I²C (100K/400K)			
	COM Port	1 x RS-232/422/485 2 x GPIO 8b (default) or 2 x RS-232 (*by request)			
	GPIO	16-bit general purpose input output I/O			
	Audio	Realtek ALC-888S, Line-in/Line-out/MIC			
	Invertor	12V/5V/3.3V selectable			
	LPC/SPI Bus	LPC			
	CAN Bus	1 x CAN Bus 2.0			
	Fan	4-wire smart fan			
	Front Panel Control	Power-on			
Board Feature	Watchdog Timer	65536 level, 0~65535 sec			
	TPM	TPM2.0 (SLB9670XQ2.0)			
	iManager 3.0	Yes			
Storage	eMMC	eMMC5.1 default 32GB, up to 64GB			
Expansion	M.2	1 x M.2 E-Key for M.2 2230 A-E Key module (PCIe x1, USB 2.0) 1 x M.2 B-Key for M.2 2280 B-M Key SSD module (SATA or NVMe/PCIe x2, auto detect), or M.2 3042 B-Key LTE module (USB 2.0, w/Bracket) ; BOM option to 1 x M.2 M-Key for M.2 2280 M-Key NVMe SSD (PCIe x4)			
	MI/O Extension	4 PCIex1 (x1/x2/x4), USB2.0, LPC, SMBus, Line-out, 12V/5V Power supply			
Power	Supply Voltage	Vin: 12V-24V +/- 10%; RTC Battery: Lithium 3V/ 210mAH			
	Connector	ATX 2x2-pin, optional: DC-Jack*			
	Power Management	AT(default), ATX			

All product specifications are subject to change without notice.

Last updated: 27-May-2022

Block Diagram

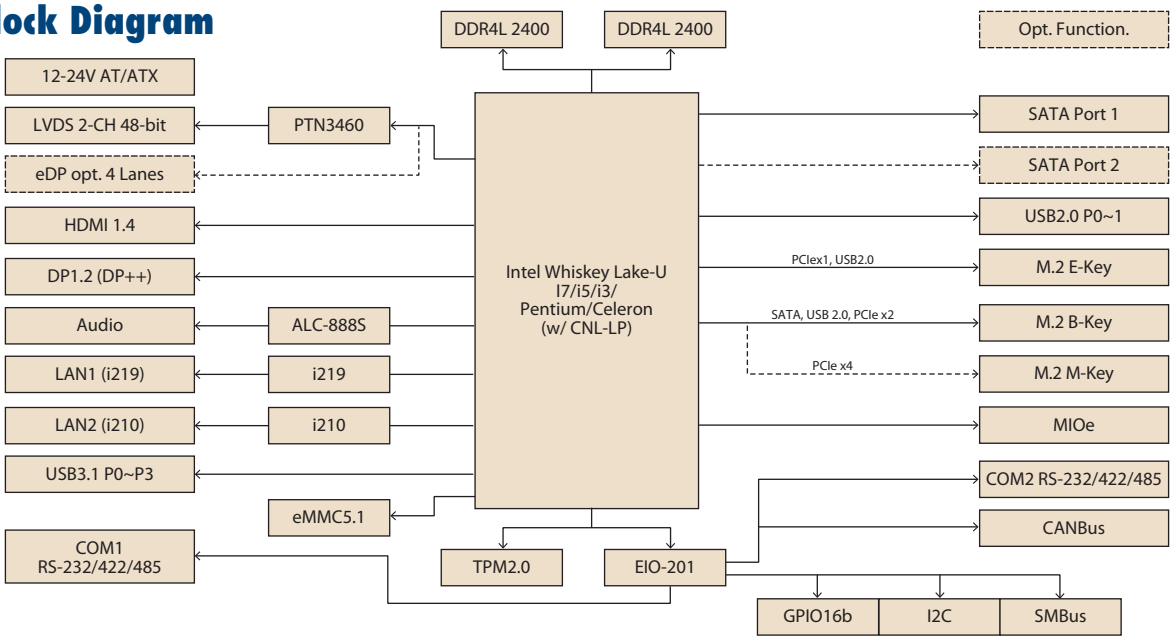

Specifications (Cont.)

Power	Max. Consumption	65.59W (12V) / 74.06W (24V)	71.28W (12V) / 74.04W (24V)	35.70W (12V) / 38.68W (24V)	TBD
	Idle Consumption	6.68W (12V) / 8.71W (24V)	7.55W (12V) / 7.55W (24V)	7.03W (12V) / 8.18W (24V)	TBD
Environment	Temperature	Operating: Standard: 0 ~ 60 °C (32 ~ 140 °F), Extend: -40 ~ 85 °C (-40 ~ 185 °F) Storage: -40 ~ 85 °C (-40 ~ 185 °F)			
	Humidity	Operating: 40 °C @ 95% relative humidity, non-condensing Storage: 60 °C @ 95%relative humidity, non-condensing			
	Vibration Resistance	3.5Grms			
Certification	EMC	CE, FCC Class B			
Mechanical	Dimensions	146 x 102 mm (5.7" x 4")			

Ordering Information

Part Number	CPU	Max. Frequency	Core	eMMC	CANBus	TPM2.0	MIOe	Cable Kit	Thermal Solution	Operating Temp
MIO-5373U-U7A1	i7-8665UE	4.4 GHz	4	32G	Y	Y	Y	Y	Passive	0 ~ 60 °C
MIO-5373U-U6A1	i5-8365UE	4.1 GHz	4	32G	Y	Y	Y	Y	Passive	0 ~ 60 °C
MIO-5373U-U3A1	i3-8145UE	3.9 GHz	2	32G	Y	Y	Y	Y	Passive	0 ~ 60 °C
MIO-5373UL-U6A1	i5-8365UE	4.1 GHz	4	N	N	Y	N	N	Passive	0 ~ 60 °C
MIO-5373UL-U3A1	i3-8145UE	3.9 GHz	2	N	N	Y	N	N	Passive	0 ~ 60 °C
MIO-5373UX-U7A1	i7-8665UE	4.4 GHz	4	32G	Y	Y	Y	Y	Passive	-40 ~ 85 °C
MIO-5373UX-U6A1	i5-8365UE	4.1 GHz	4	32G	Y	Y	Y	Y	Passive	-40 ~ 85 °C

*Default BIOS supports 64 bits OS installation, BIOS for 32 bits OS installation is supported by project.

Packing List

Part No.	Description	Quantity
	MIO-5373 SBC	1
	Startup Manual	1
1700006291	SATA cable 30cm	1
1700018785	A CABLE SATA 15P/1*4P-2.5 35cm	1
1700019584	A Cable 2*5P-2.0/Audio JACK*3 20cm	1
1700030404-01	RS-232 9P(M)/1*10P-1.25 20cm MIO-5373	1
1700030406-01	M Cable 2*5P-2.0/USB-A 4P(F)*2 20cm	1
1960091427N001	MIO-5373 heatsink for 0 ~ 60 °C	1
	mini Jumper pack	1
1960091427N011	MIO-5373 heatsink for -40 ~ 85 °C	1

*MIO-5373UL series do not include cable kits in packing list.

Optional Accessories

Part No.	Description
1970004423N000	Heat spreader for single layer display HDMI connector (Optional)
1960090264N000	Bracket for M.2 2280 to M.2 3042
1970004423N010	Heat spreader for dual layer display HDMI + DP connector

Embedded OS/API

Embedded OS/API	Part No.	Description
Windows 10	20706WX9HS0030	64-bit (UEFI Mode Only)
Ubuntu 20.04	20706U20DS0010	Ubuntu Desktop 20.04 LTS 64-bit Image & License Sticker for MIO-5373
Yocto	Support by Request	Yocto BSP and Test Image
Software API	Website Download	SUSI v4.0

Rear I/O View

Dual layer HDMI + DP (Default)

Single layer HDMI for low profile (optional)

Reliable Embedded BIOS Solutions

Custom BIOS services with long-term support

Advantech's high-quality embedded BIOS solutions deliver rapid execution and feature expert BIOS team support. These solutions feature multi-functional designs that ensure security and enable power/boot management. Advantech further provides 10+ years of BIOS version management, internal management, and longevity support for both hardware and BIOS — enhancing application efficiency, diversifying functionality, and optimizing performance.

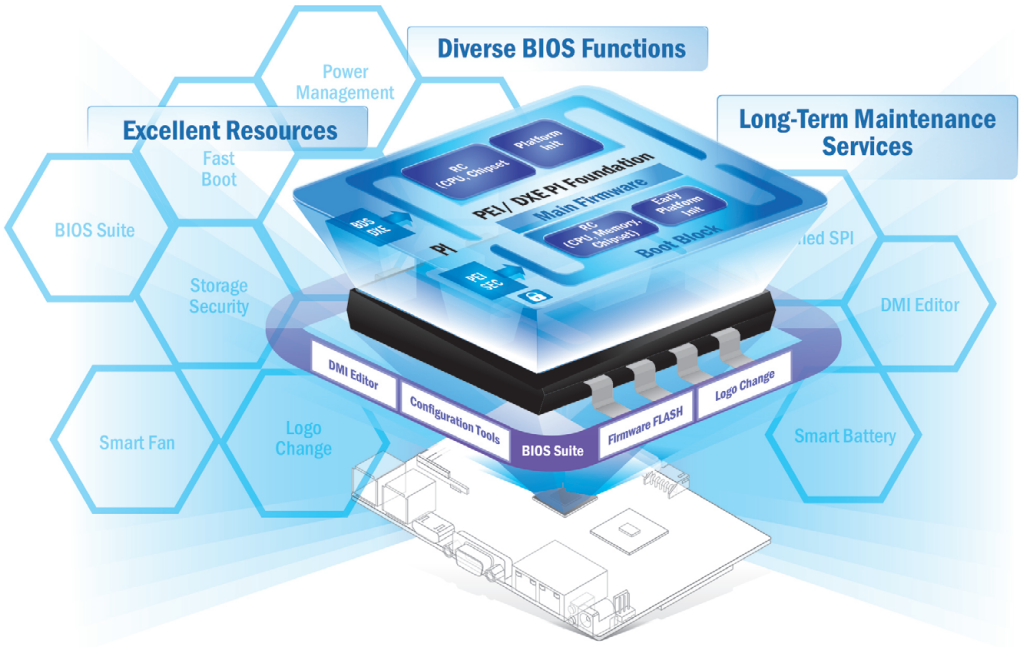

Embedded BIOS Solution Advantages

Sufficient Sources

- Strong partnership with BIOS vendors
- 50+ engineers with extensive industrial BIOS experience

Diverse BIOS Functions

- Multi-layer security
- 3 second fast boot
- Power management
- BIOS suite utility

Long-Term Maintenance Services

- Platform longevity support
- 10-year BIOS version control
- BIOS remote backup

Value-Added Customization Process

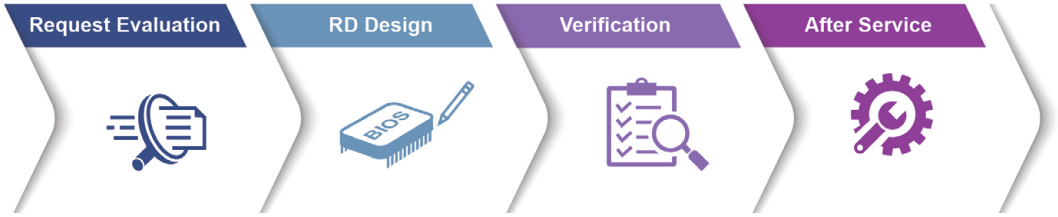

Embedded Linux Support and Design-in Services

Hardware Certified Ubuntu and Yocto with Eco Partner Services

Linux is the most popular embedded OS for transportation, outdoor services, factory automation, and mission critical applications. Its open source and kernel reliability features ease security updates, and make it particularly adaptable to new AI and Edge computing technology. Advantech has cooperated with Canonical and other software partners to provide hardware certified Ubuntu image and Yocto BSP as Linux offerings. The Advantech, Embedded Linux, and Android Alliance (ELAA) delivers local software services and consultation.

Features

Certified OS and BSP

- Platform compatibility tests
- Preloaded functional driver and software stacks

Licensed Services

- License authorized Canonical delivers 10-years of bug fixes and security updates
- In-house bundled service

Numerous AI and Edge Resources

- Containerized technology for service provision and deployment
- AI resources from Caffe, TensorFlow, and mxnet

Local Partner Alliance

- Embedded Linux and Android Alliance (ELAA)

Edge AI Suite

AI development for diverse application at the Edge

Increasing demand for AI inference/analytic capabilities at the Edge make AI training models, software development environments, and hardware configuration key factors in successful solution deployment. Advantech's Edge AI Suite helps users build AI demo devices quickly and choose optimal hardware solutions easily.

5x Performance Boost	All-in-one Installation	One Click AI Experience	Plug-and-play Environment	Discover Cost-effective Hardware
• Integrated Intel® OpenVINO™ technology • Boost AI using Advantech hardware	• Build AI environment in under 5 minutes • Ready-to-use configuration	• User friendly configuration guidance • One-click Benchmark acquisition	• Easy access to 100+ AI inference extensions • Software development package available	• Diverse CPU/RAM options • Find hardware solutions for AI development

WISE-DeviceOn

Massive IoT Device Management Utility

IoT deployment and management typically involves numerous disparate devices installed on multiple sites. These devices require effective monitoring, managing, and tracking. Advantech's easy-to-use WISE-DeviceOn interface enables users to remotely monitor device health, troubleshoot problems, and send software/firmware updates over-the-air (OTA). In sum, DeviceOn empowers quick real-time responsiveness to emerging problems.

Features

Comprehensive Management	Remote Access	Efficient Operations
• Devices status • Peripherals/firmware • Open for extension	• Real-time monitoring • Remote controls • Troubleshooting	• Zero-touch on-boarding • OTA updates • Batch control

Product Highlights

SOM-6883
High-performance 11th Gen Intel® COMe Type 6 Module

MIO-5375
Compact 11th Gen Intel® Outdoor Focused 3.5" SBC

EPC-B5587
10th Gen Intel® Xeon® based Edge server

EPC-R3220
Arm based IoT Edge Gateway