IPC-3012

Compact Chassis for PICMG 1.3 Half Size SHB

CE FCC

Features

- Compact chassis with two front expansion slots
- Shockproof drive bay for two 2.5" HDDs
- Equipped with 80 plus FLEX 250W power supply
- Thumb-screw for top cover easy opening
- Built-in Intrusion switch function
- Bidirectional to mount chassis on wall or workbench

Specifications

		External	Internal
Disk Drive Bay		External	Internal
	2.5"	-	2
Cooling	Fan	2 (6 cm/27 CFM)	
	Air Filters	Yes	
Front I/O interface	USB	2	
Miscellaneous	LED Indicators	Power, HDD	
	Control	Power Switch	
System Monitoring		Chassis intrusion switch	
Environment		Operating	Non-operating
	Temperature	0 ~ 40 °C (32 ~ 104 °F)	-20 ~ 60 °C (-4 ~ 140 °F)
	Humidity	10 ~ 85 % @ 40 °C, non-condensing	10 ~ 95 % @ 40 °C, non-condensing
	Vibration (5-500 Hz)	1 Grms	2 G
	Shock	10 G (with 11 ms duration, half sine wave)	
Physical Characteristics	Dimensions (W x H x D)	232 x 90 x 232 mm (9.13" x 3.54" x 9.13")	
	Weight	3.24 kg (7.14 lb)	

Front View

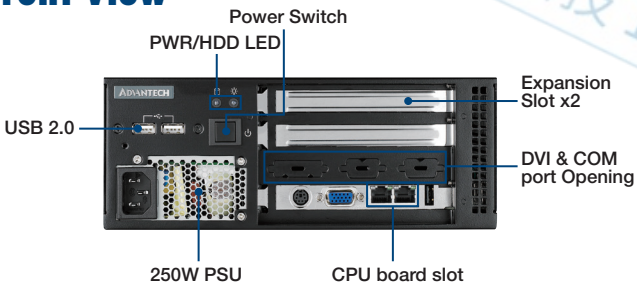

Rear View

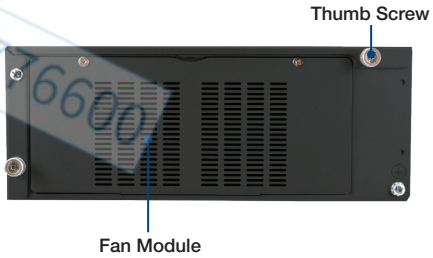

Inside View

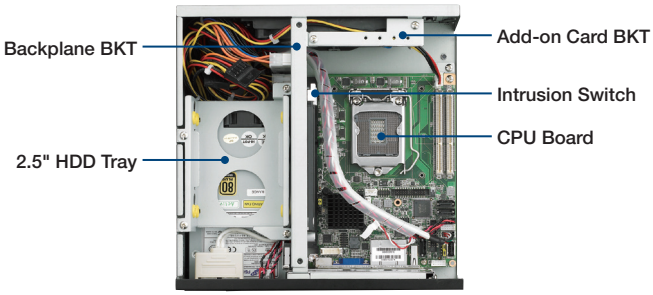

研伟科技 15323716600

All product specifications are subject to change without notice.

Dimensions

Unit: mm [inch]

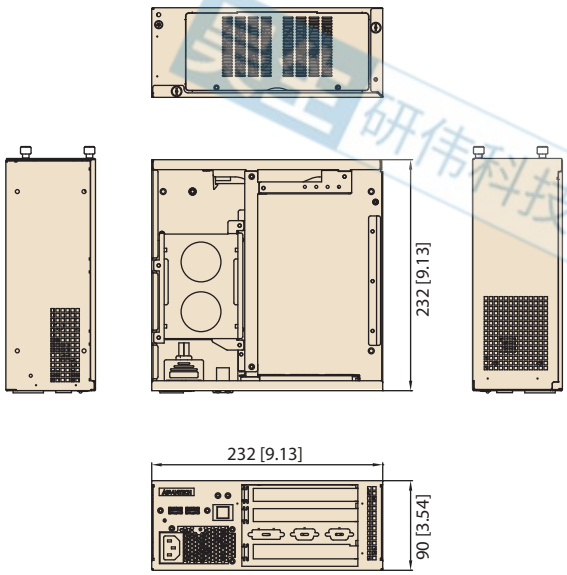

Installation

Unit: mm [inch]

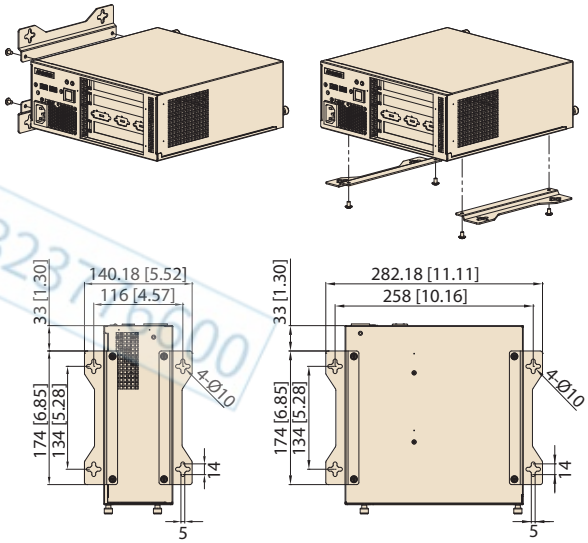

Ordering Information

Part Number	Description
IPC-3012-25ZE	With 250W Power supply 96PS-A250WFX-2, with ATX switch

Backplane Options

Part Number	Description
PCE-3B03A-00A1E	3 Slots PICMG1.3BP, PCIe x16*1, PCIe x4*1
PCE-3B03-01A1E	3 Slots PICMG1.3BP, PCIe x16*1, 32-Bit/33 MHz PCI*1

Optional Accessories

Part Number	Description
1750006419	27.72 CFM, system fan 60 x 60 x 13 mm
1990005760T00B	Filter cover
1960053207N001	1.5U CPU cooler for one add-on card applied
1960053065N001	1U CPU cooler for two add-on cards applied