IPC-6606 / 6608

6/8-Slot Desktop/Wallmount Chassis

CE FCC

Features

- Supports 6/8-slot PICMG 1.0 / PICMG 1.3 backplane
- Shockproof drive bay for 5.25" ODD and 3.5" HDD
- Two front access USB ports
- Bidirectional to mount chassis on wall or workbench
- Easily-maintained system fan and filter

Specifications

Model Name		IPC-6606	IPC-6608
Drive Bay	5.25"	1	2
	3.5"	2 (1 front-accessible, 1 internal)	1
Front I/O Interface	USB 2.0	2	2
Cooling	Fan	1 (9 cm / 51.5 CFM)	1 (12 cm / 82 CFM)
	Air Filter	Yes	
Miscellaneous	LED Indicators	Power and HDD	
	Control	Power switch and reset button	
Environment		Operating	Non-operating
	Temperature	0 ~ 40 °C (32 ~ 104 °F)	-20 ~ 60 °C (-4 ~ 140 °F)
	Humidity	10 ~ 85% @ 40 °C, non-condensing	10 ~ 95% @ 40 °C, non-condensing
	Vibration (5 ~ 500 Hz)	1 Grms	2 G
	Shock	10 G (with 11 ms duration, half sine wave)	
Physical Characteristics	Dimensions (W x H x D)	174 x 254 x 396 mm (6.9" x 10" x 15.6")	174 x 315 x 410 mm (6.9" x 12.4" x 16.1")
	Weight	9 kg (19.8 lb)	11 kg (24.2 lb)

研伟科技 15323776600

Front View

IPC-6606

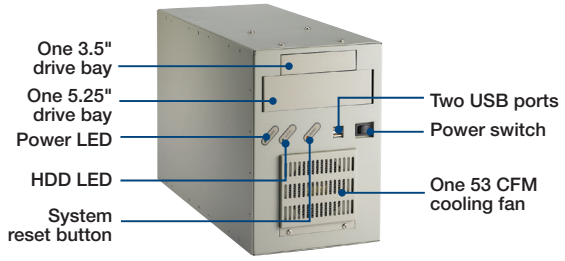

Inside View

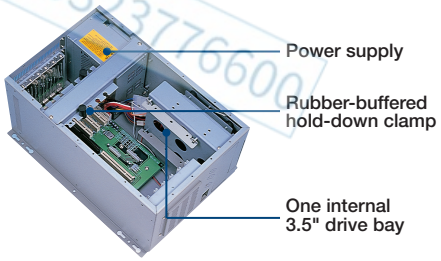

IPC-6608

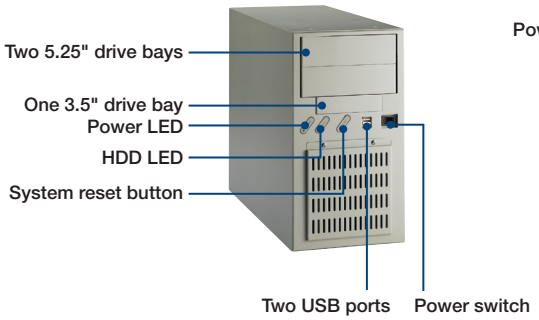

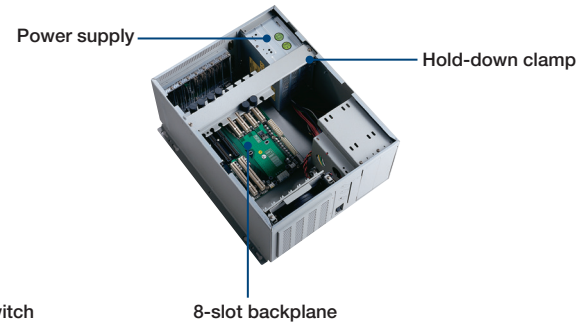

All product specifications are subject to change without notice.

Dimensions

Unit: mm [inch]

IPC-6606

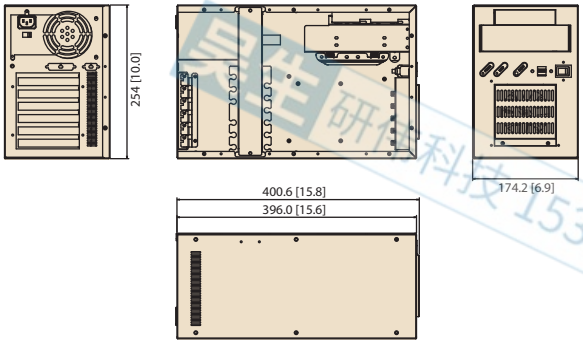

IPC-6608

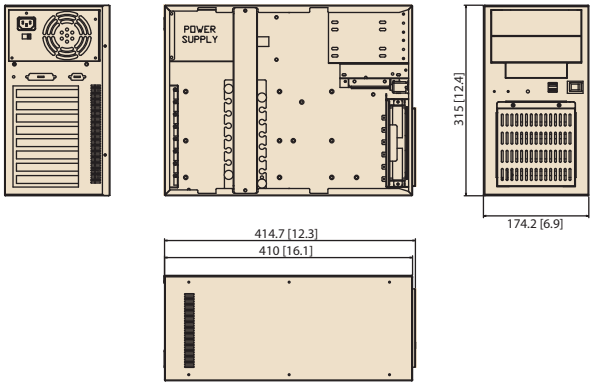

Installation

Unit: mm [inch]

IPC-6606

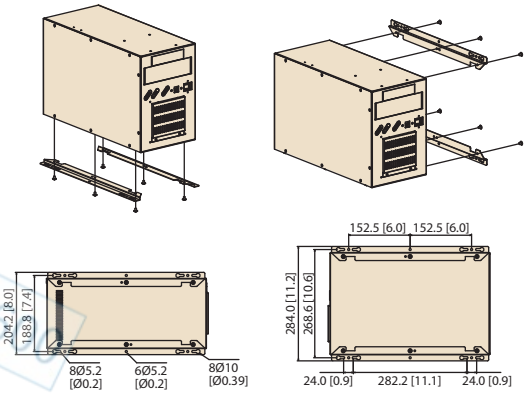

IPC-6608

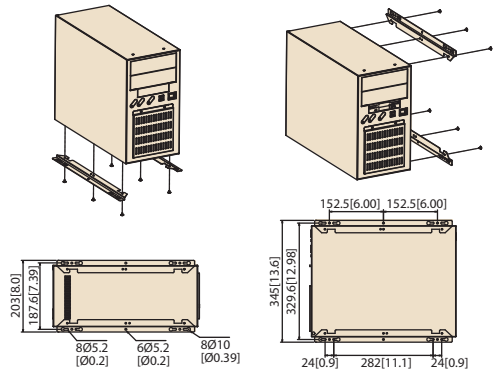

Ordering Information

Part Number	Power Supply	Wattage	Switch
IPC-6606			
IPC-6606BP-30D	PS8-300ATX-ZBE	300W	ATX
IPC-6608			
IPC-6608BP-30D	PS8-300ATX-ZBE	300W	ATX

Optional Accessories

Part Number	Description
IPC-DT-3120E	Mobile rack for converting a 3.5" drive bay to dual 2.5" SATA HDD trays
IPC-DT-5230E	Mobile rack for converting dual 5.25" drive bays to three 3.5" SATA HDD trays