PCM-2300MR

MR4A16B, MRAM, 2 MByte, mPCIe

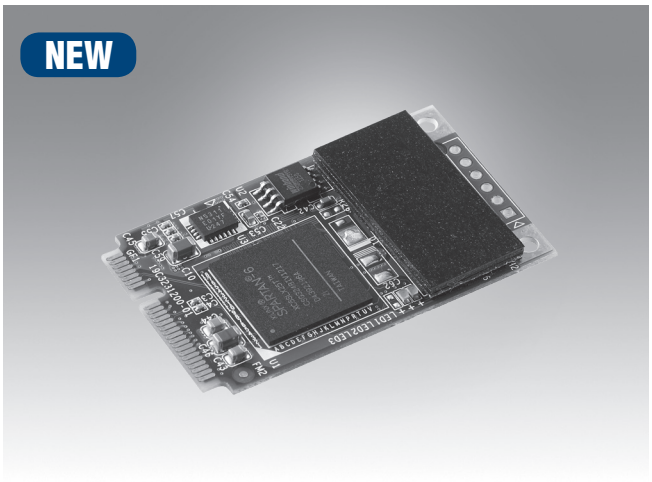

Features

- Meets Advantech iDoor technology standard
- PCI Express® Mini card specification revision 1.2 compliant
- Data always non-volatile for >20-year at temperature
- Read / Write memory speed 6 MB/Sec
- 2MB MRAM Storage
- I/O address automatically assigned by PCIe plug & play
- Supports Microsoft® Windows CE5/CE6
- Supports Microsoft® Windows Enterprise Server 2008, Windows XP/7
- Supports Linux Intel® x86 hardware platform
- Supports embedded automation PC UNO-2200/2300/2400 series
- Supports control DIN-rail PC UNO-1200/1300/1400 series
- Supports control cabinet PC UNO-3200/3300/3400 series
- Supports control panel computers TPC-xx81/xx82 series
- Supports thin client panel computers TPC-xx51 series

Introduction

The PCM-23 series are industrial storage or memory modules for the mPCIe interface which is able to extend connection to the connector through iDoor technology with different functions. They are all compatible with the PCI Express® Mini Card Specification Revision 1.2, including isolated / non-isolated RS-232/422/485 communication cards for automation control, Wi-Fi/3G/GPS/GSM/LTE wireless communication models for data exchange for management and machine level automation applications, ZigBee module as an IoT terminal or controller and PoE function for smart cameras in detection-inspection-production applications. This is a flexible design that enables customers to customize their features with iDoor Technology.

Specifications

General

- **Bus Type** PCI Express Mini Card Revision 1.2
- **Certification** CE, FCC class A
- **Dimensions** Module: 51 x 30 x 12.4 mm (2" x 1.18" x 0.49")
- **Power Consumption** Typical : +3.3 V @ 150 mA

Memory

- **Memory Everspin** MR4A16B
- **Size** 2 MB
- **Read/Write Speed** 6 MB/sec

Software

- **Driver** Microsoft® Windows CE5/CE6
  Microsoft® Windows Enterprise Server 2008
  Microsoft® Windows XP/7

Environment

- **Humidity (Operating)** 5-95% RH, non-condensing
- **Operating Temperature** -20 ~ 60°C (-4 ~ 140°F)
- **Storage Temperature** -40 ~ 85°C (-40 ~ 185°F)
- **Maximum magnetic field immunity during write** 8000 A/m
- **Maximum magnetic field during reading or standby** 8000 A/m

Dimensions

Module
PCM-2300MR

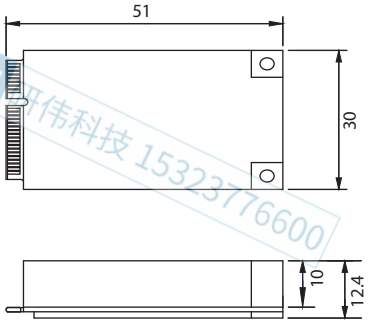

昊生 科伟科技 15323776600

Ordering Information

- **PCM-2300MR-AE** MR4A16B, MRAM, 2MByte

All product specifications are subject to change without notice.