UNO-3272G

Intel® Celeron J1900 Automation Computer with 2 PCI(e) Expansion Slots, 2 x GbE, 1 x mPCIe, HDMI, VGA

Features

- Intel® Celeron® J1900 2.0GHz processor with 4GB DDR3L memory
- 3 x USB2.0, 1 x USB3.0, 2 x RS232/422/485, 2 x RS232
- 2 x 10/100/1000BASE-T Ethernet
- VGA, HDMI support 2 x independent displays
- Optional Digital I/O support for sensing and controlling
- Dedicated TPM2.0 microcontroller designed for hardware security
- Flexible system I/O expansion by iDOOR technology
- Support diverse fieldbus protocol by iDOOR technology
- Dual Power input for power redundancy

Introduction

The expandable fanless control cabinet PC UNO-3272G equipped with a Intel® Celeron J1900 processor, rich I/O including 4 x USB, 2 x GigaLAN, 2 x RS-232/422/485, and 2 x RS-232 ports, as well as VGA and HDMI display interfaces, UNO-3272G is designed to deliver high reliability and maximum flexibility for industrial automation applications. The provision of up to 2 expansion slots (2 x PCIex1 or 2 x PCI)supports the integration of modular peripherals and ensures flexible installation in diverse cabinet configurations.

Specifications

General

- **Certification** CE, UL, CCC, FCC, BSMI
- **Dimensions (W x D x H)** 145 x 177 x 238 mm (standard Rack 4U)
- **Form Factor** Regular Size
- **Mounting** Wall mount, Stand mount
- **Weight (Net)** 2.9kg
- **Power Requirements** 10-36 V_{DC}
- **Power Consumption** 24W (Typical, w/o expansion card), 60W (Max)
- **OS Support** WIN7/8, WES7, Win10 Ent. LTSB, AdvLinuxTU

System Hardware

- **BIOS** AMI UEFI 128Mbit Flash BIOS
- **Watchdog Timer** Programmable 255 levels timer interval, from 1 to 255 sec
- **Processor** Intel Celeron J1900 2.0GHz Quad core
- **System Chip** Integrated Intel SoC Chipset
- **Memory** Built-in 4GB DDR3L 1333 MHz, two sockets support up to 8GB
- **Graphics Engine** Intel HD Graphics
- **Ethernet** LAN A: Intel® i211-AT GbE, IIEEE802.1AS, 802.3az
  LAN B: Intel® i211-AT GbE, IIEEE802.1AS, 802.3az
  (2 x RJ45, 10/100/1000 Mbps IEEE 802.3 1000Base-T Fast Ethernet)
- **LED Indicators** LEDs for Power and HDD
- **Storage** 1 x M.2 B-key (22x42) up to 512GB
  1 x built-in 2.5" SATA HDD/SSD brackets
- **Expansion** 1 x Full-size mPCIe
  2 x PCIex1

I/O Interfaces

- **Serial Ports** 2 x RS-232/422/485 with DB9 connectors ,115200bps
  2 x RS-232 with DB9 connectors ,115200bps
- **LAN Ports** 2 x RJ45, 10/100/1000 Mbps IEEE 802.3 1000Base-T Fast Ethernet
- **USB Ports** 1 x USB3.0, 3 x USB2.0
- **Displays** 1 x VGA, supports 1920 x 1080 @ 60Hz 24bpp
  1 x HDMI, supports 1920 x 1080 @ 60Hz 24bpp
- **Audio** Line-Out
- **Power Connector** 1 x 4 Pin, terminal Block

Environment

- **Operating Temperature** -20 ~ 60°C (-4 ~ 140°F) with 0.7m/s airflow environment
- **Storage Temperature** -40 ~ 85°C (-40 ~ 185°F)
- **Relative Humidity** 10 ~ 95% RH, non-condensing
- **Shock Protection** Operating, IEC 60068-2-27, 50G, half sine, 11ms (SSD)
- **Vibration Protection** Operating, IEC 60068-2-64, 3Grms, random, 5 ~ 500Hz, 1hr/axis (SSD); 0.5Grms, random, 5 ~ 500Hz, 1hr/axis (HDD)

Installation Scenario

Stand mount

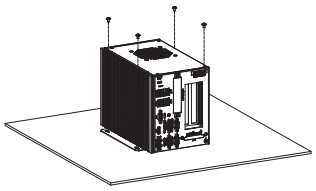

Wall mount

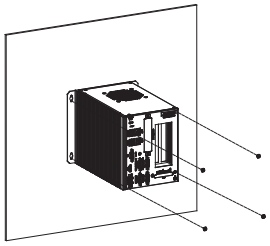

*Mounting kit included in default package

All product specifications are subject to change without notice.

Dimensions

Unit: mm

Without mounting kit

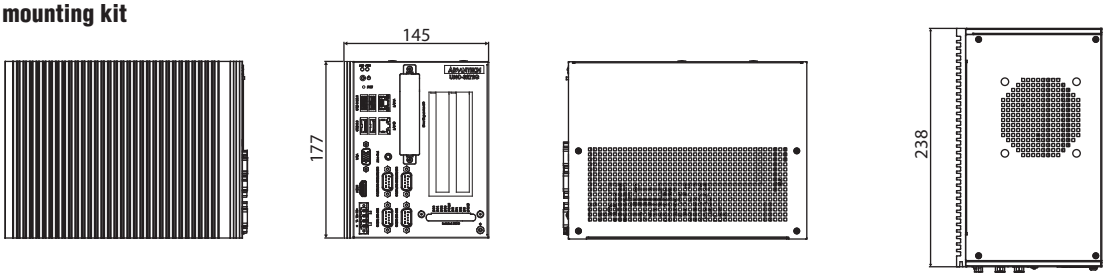

With mounting kit

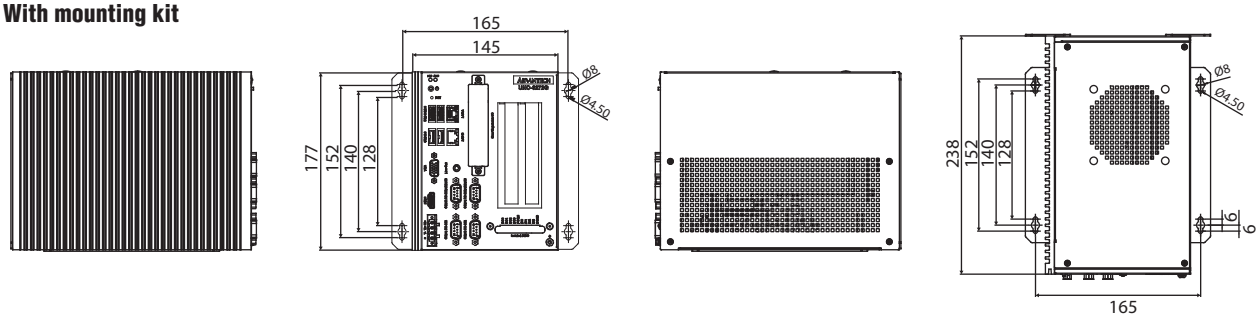

(Wall mount) (Stand mount)

I/O View

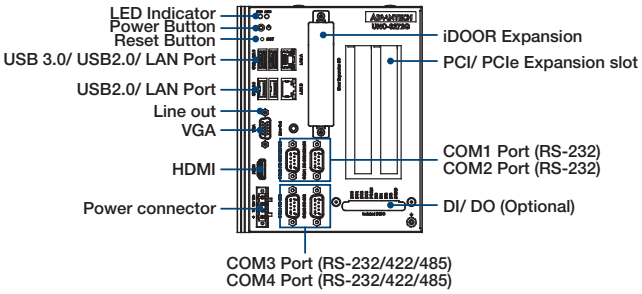

Ordering Information

- **UNO-3272G-J021AE** Intel J1900, 2GHz, 4GB DDR3L, 2 x LAN, 4 x COM, 4 x USB, 2 x PCIex1

Optional Expansion Type

P/N	Support Model	Expansion Type
9893UR01000	UNO-3272G	2 x PCI slot

iDoor Modules

- **PCM-2300MR-AE** MR4A16B, MRAM, 2 MByte, mPCIe
- **PCM-24R2PE-AE** Intel i350, GbE, PoE IEEE 802.3af, PD, RJ45 x 2
- **PCM-24S2WF-BE** 802.11 a/b/g/n/ac 2T2R w/BT4.1, Atheros QCA6174A
- **PCM-26D2CA-AE** SJA1000 CANbus, CANopen, DB9 x 1
- **PCM-24D2R4-BE** 2-Ports Isolated RS-422/485 mPCIe, DB9
- **PCM-24D2R2-BE** 2-Ports Isolated RS-232 mPCIe, DB9
- **PCM-24D4R4-BE** 4-Ports Non-Isolated RS-422/485 mPCIe, DB37
- **PCM-24D4R2-BE** 4-Ports Non-Isolated RS-232 mPCIe, DB37
- **PCM-27D24DI-AE** 24-Channels Isolated Digital I/O with counter mPCIe, DB37
- **PCM-24R1TP-AE** 1-Port Gigabit Ethernet, Intel® 82574L, mPCIe, RJ45

Optional Accessories

- **96PSA-A150W24T2-3** 150W AC to DC power adapter
- **9893U20600E** Digital 4DI/4DO board
- **UNO-REPWR-AE** Remote power & reset kit
- **1702002600** Power Cable US Plug 1.8 M
- **1702002605** Power Cable EU Plug 1.8 M
- **1702031801** Power Cable UK Plug 1.8 M
- **1700000596** Power Cable China/Australia Plug 1.8 M

Embedded O/S

- **20703WX9ES0007** Img Win10 LTSC 2019 x64 V6.04 B026
- **20703WE7PS0031** Img WS7P x64 MUI V4.19 B017

Please note: If some optional modules are offered with the system, additional system certificates may be required in certain regions/countries.
Please contact Advantech for certificate compliance.