UNO-1372G

Intel® Atom™ Quad-Core Small Size Control DIN-rail PC w/ 3 x GbE, built-in 4GB DDR3L, 2 x mPCIe, 1 mSATA, 2 x COM, 8 x DI/O, 3 x USB, HDMI, VGA

Features

- Intel® Atom E3845 1.91GHz processor with 4GB DDR3L memory
- 3 x GbE, 3 x USB, 2 x COM, 1 x VGA, 1 x HDMI, audio, iDoor, mSATA, 2 x mPCIe, 1 x SATA, 4 x DI, 4 x DO, 1 x power terminal
- Compact with fanless design
- Dual power input for avoiding power down time
- Exchangeable RTC battery with easy access on the top
- Digital I/O with isolation protection for sensing and controlling
- Diverse system IO and supports fieldbus protocol by idoor technology as a protocol gateway
- 3G/GPS/GPRS/Wi-Fi communication by idoor technology as a communication gateway
- Supports MRAM by iDoor technology
- LAN redundancy (teaming)

Introduction

The UNO-1372G is an Intel Atom Quad-Core DIN-rail controller. This controller features dual power inputs that shorten the down time to enhance operation excellence. The general purpose input/output ports also help machine builders integrate direct control of start/stop inspection and indicate inspection results. The UNO-1372G is also equipped with Advantech iDoor technology that uses iDoor modules to extend this product to become a gateway controller, such as a PoE card, or isolation serial port card. The UNO-1372G also features 3 gigabyte LAN ports, 1 USB 3.0 port, 2 COM ports and HDMI& VGA display ports for essential upstream and downstream links, for example, PoE connected to IP camera from iDoor.

Specifications

General

- **Certification** — CE, FCC, UL, CCC, BSMI
- **Dimensions (W x D x H)** — 85 x 139 x 152 mm (3.3" x 5.5" x 6.0")
- **Form Factor** — Small Size
- **Enclosure** — Aluminum Housing
- **Mounting** — DIN-rail, Wallmount
- **Weight (Net)** — 1.6kg (3.5lbs)
- **Power Requirement** — 9~36V_{DC} (Recommend 12/24 V_{DC})
- **Power Consumption** — 24W (Typical), 50W (Max)
- **OS Support** — Microsoft® Windows 7/8/10, WES7, AdvLinux

System Hardware

- **BIOS** — AMI UEFI 128Mbit Flash BIOS
- **Watchdog Timer** — Programmable 255 levels timer interval, from 1 to 255 sec
- **Processor** — Intel Atom E3845 1.91GHz, 2MB L2 Cache
- **System Chip** — Integrated Intel SoC Chipset
- **Memory** — Built-in 4GB DDR3L 1333 MHz (Up to 8GB)
- **Graphics Engine** — Intel® HD Graphics
- **Ethernet** — LAN A, B: Intel® i210-IT GbE, 802.1Qav, 802.1AS, 802.3az
LAN C: Realtek RTL8111E GbE
- **LED Indicators** — LEDs for Power, battery, LAN (Active, Status), COM (Tx/Rx), HDD and programmer LED
- **Storage** — 1 x mSATA
One drive bay for SATA 2.5" HDD (Compatible with 9.5mm height HDD)
- **Expansion** — 2 x Full-size mPCIe slot

I/O Interfaces

- **Serial Ports** — 1 x RS-232, DB9, 50bps~115.2kbps
1 x RS-422/485, DB9, auto flow control, 50bps~115.2kbps
- **LAN Ports** — 3 x RJ45, 10/100/1000 Mbps IEEE 802.3u 1000BASE-T Fast Ethernet
- **USB Ports** — 3 x USB Ports (2 x USB2.0, 1 x USB 3.0)
- **Isolated DIO** — 4-ch digital input, 4-ch digital output (2500 V_{DC})
- **Displays** — 1 x VGA, supports 1920 x 1080 @ 60Hz 24bpp
1 x HDMI 1.4a, supports 1920 x 1080 @ 60Hz 24bpp
- **Audio** — Line-Out
- **Power Connector** — 1 x 4 Pins, Terminal Block to support dual power input

Environment

- **Operating Temperature** — - 20 ~ 60°C (-4 ~ 140°F) @ 5 ~ 85% RH with 0.7m/s airflow (Industry SSD)
- **Storage Temperature** — - 40 ~ 85°C (-40 ~ 185°F)
- **Relative Humidity** — 95% RH @ 40°C, non-condensing
- **Shock Protection** — Operating, IEC 60068-2-27, 50G, half sine, 11ms
- **Vibration Protection** — Operating, IEC 60068-2-64, 5Grms, random, 5 ~ 500Hz, 1 hr/axis
- **Ingress Protection** — IP40

Installation Scenario

DIN-rail mounting illustration

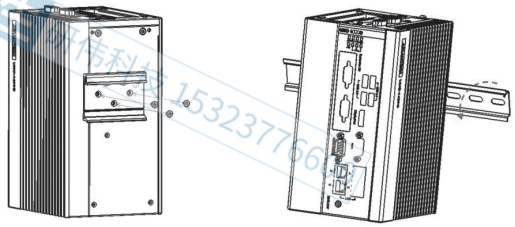

Wall mounting illustration

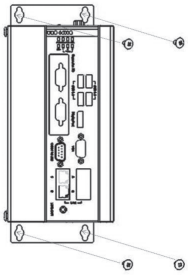

All product specifications are subject to change without notice.

Last updated: 6-Jan-2021

Dimensions

Unit: mm

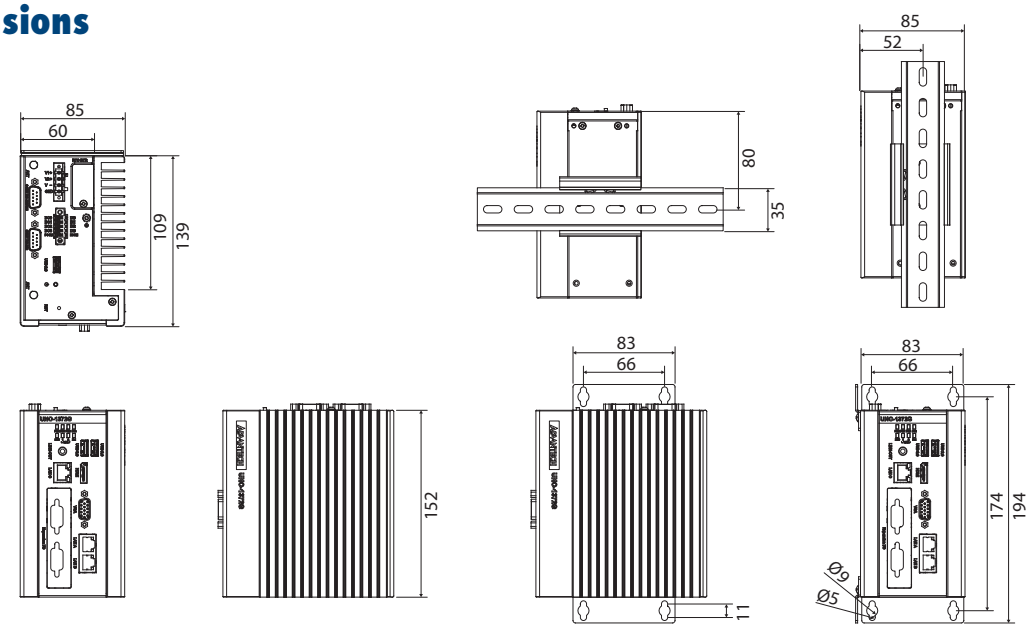

Front I/O View

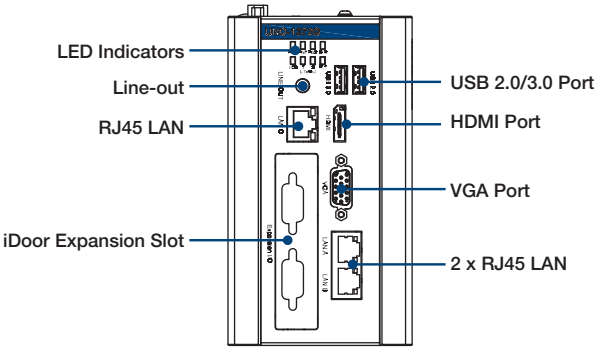

Top I/O View

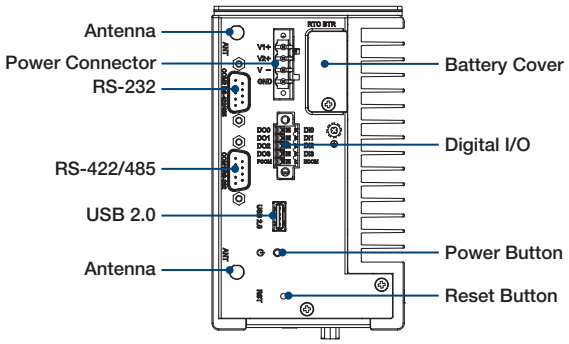

Ordering Information

- **UNO-1372G-E3AE** Intel Atom Quad-Core 1.91GHz, 4GB, 3 x LAN, 2 mPCIe, iDoor

iDoor Modules

- **PCM-23C1CF-BE** 1 CFast Slot with Cover Protection
- **PCM-23U1DG-BE** USB Slot w/ Lock for USB Dongle
- **PCM-24R2GL-AE** 2-Port Gigabit Ethernet, mPCIe, RJ45
- **PCM-24U2U3-AE** 2-Port USB 3.0, mPCIe, USB-A type
- **PCM-24D2R4-BE** 2-Port Isolated RS-422/485 mPCIe, DB9
- **PCM-24D4R4-BE** 4-Port Non-Isolated RS-422/485 mPCIe, DB37
- **PCM-24S2WF-BE** WiFi 802.11 ac/a/b/g/n 2T2R w/Bluetooth 4.1
- **PCM-24S33G-AE** Wide-Temp 3.75G HSPA and GPS, 2-in-1, Full-size mPCIe w/ Redundant SIM Card holder, 2-port SMA
- **PCM-26R2PN-MAE** 2-Port Hilscher netX100 FieldBus mPCIe, PROFINET, RJ45, Master
- **PCM-26R2PN-SAE** 2-Port Hilscher netX100 FieldBus mPCIe, PROFINET, RJ45, Slave
- **PCM-26D1DB-MAE** 1-Port Hilscher netX100 FieldBus mPCIe, PROFIBUS, DB9, Master
- **PCM-26D1DB-SAE** 1-Port Hilscher netX100 FieldBus mPCIe, PROFIBUS, DB9, Slave

Optional Accessories

- **PWR-247-DE** 100-240V 60W 24V 2.5A Power Supply
- **1702002600** Power Cable US Plug 1.8 M (Industrial Grade)
- **1702002605** Power Cable EU Plug 1.8 M (Industrial Grade)
- **1702031801** Power Cable UK Plug 1.8 M (Industrial Grade)
- **1700000596** Power Cable China/Australia Plug 1.8 M (Industrial Grade)

Embedded O/S

- **20703WX9ES0026** Img W10LTSC x64 V6.05 B021 UNO-1372G-ExAE Entry
- **20703LEB1S0091** Image AdvLinuxTu V2.0.6 for UNO/TPC series
- **20703WE7PS0010** Img WS7P X64 MUI V4.18 B024 for UNO-1372G
- **20703WE7PS0011** Img WS7P X86 MUI V4.18 B021 for UNO-1372G
- **20703WC70S0037** Img WEC7 MUI V4.02 B117 for UNO-1372G

Please note: If some optional modules are offered with the system, additional system certificates may be required in certain regions/countries.
Please contact Advantech for certificate compliance.