UNO-1372G-J

Intel® Celeron® J1900 Small-Size DIN-rail Control PC, 4G DDR3L, 2 GbE, iso. 4 COM, 4 DI, 4 DO, 4 USB, HDMI, DP, TPM2.0

Features

- Intel® Celeron® J1900 2.0GHz processor with 4GB DDR3L memory
- Robust design for industrial control and harsh environment
- Isolated protection of COM and digital Input/output
- Compact fanless design
- Wide power input range and operating temperature
- Chassis grounding protection
- Flexibility of expanding functionality for various application
- Support diverse industrial fieldbus, IO & peripheral and wireless communication iDoor modules
- Dedicated TPM2.0 microcontroller designed for hardware security

Introduction

The UNO-1372G series is a ruggedized fanless automation PC. The DIN-rail mounting form factor is suitable to be used in control cabinet for industrial automation application. The well-designed heat dispassion mechanism enables the UNO-1372G operating in wide temperatures (from -20 to 60°C). The latest UNO-1372G-J includes Intel Celeron J1900 platform and builds in 4G DDR3L RAM. It provides rich interfaces including 2 x GbE LAN, 1 x USB3.0, 3 x USB2.0 ports, 4 COM ports and 4DI/4DI. It also equips with one DP and one HDMI for display. UNO-1372G-J provides great expansion including 2 x Mini-PCIe (one supports mSATA option) and supporting Advantech's latest iDoor technology. It has great expandability for wireless communication, I/O expansion and industrial protocols via iDoor technology. With multiple OS and driver support, such as Windows 7, Windows 10 and embedded Linux, users can integrate applications easily in an application ready platform that can provide versatile functions to fulfill diverse requirements.

Specifications

General

- **Certification** CE, FCC, UL, CCC, BSMI
- **Dimensions (W x D x H)** 65 x 105 x 150mm (2.6" x 4.1" x 5.9")
- **Form Factor** Small Size
- **Enclosure** Aluminum Housing
- **Mounting** DIN-rail
- **Weight (Net)** 1kg (2.2lbs)
- **Power Requirement** 10~36V_{DC}
- **Power Consumption** 19W (Typical), 35W (Max.)
- **OS Support** Microsoft® Windows 7/8/10, WES7, AdvLinux (Ubuntu 18.04)

System Hardware

- **BIOS** AMI UEFI 64Mbit Flash BIOS
- **Watchdog Timer** Programmable 255 levels timer interval, from 1 to 255 sec
- **Processor** Intel® Celeron® J1900, 2GHz
- **System Chip** Integrated Intel SoC Chipset
- **Memory** Built-in 4GB DDR3L 1600 MHz (Up to 8GB)
- **Graphics Engine** Intel® HD Graphics
- **Ethernet** Intel® i210-IT GbE, 802.1Qav, 802.1AS, 802.3az
- **LED Indicators** LEDs for Power, RTC battery, LAN (Active, Status), COM (Tx/Rx), HDD, Programmable LED
- **Storage** 1 x mSATA shared with mPCIe slot
  1 x drive bay for SATA 2.5" HDD (Compatible with 9.5mm height HDD)
- **Expansion** 2 x Full size mPCIe slots
- **Trusted Platform Module** TPM2.0

I/O Interfaces

- **Isolated Serial Ports** 4 x RS232/422/485, DB9, 50bps-115.2kbps (Isolation Protection 1500V_{DC})
- **LAN Ports** 2 x RJ45, 10/100/1000 Mbps IEEE 802.3u 1000BASE-T Fast Ethernet
- **USB Ports** 4 x USB Ports (3 x USB2.0, 1 x USB 3.0)
- **Isolated DIO** 4-ch digital input (Default contact)
  4-ch digital output (2500 V_{DC})
- **Displays** 1 x DP, supports 2560 x 1440 @ 60Hz
  1 x HDMI, supports 1920 x 1080 @ 60Hz
- **Power Connector** 1 x 2 Pins, Terminal Block
- **Grounding Protection** Chassis Grounding

Environment

- **Operating Temperature** - 20 ~ 60°C (-4 ~ 140°F) @ 5 ~ 85% RH with 0.7m/s airflow (Industry SSD)
- **Storage Temperature** - 40 ~ 85°C (-40 ~ 185°F)
- **Relative Humidity** 95% RH @ 40°C, non-condensing
- **Shock Protection** Operating, IEC 60068-2-27, 50G, half sine, 11ms
- **Vibration Protection** Operating, IEC 60068-2-64, 1Grms, random, 5 ~ 500Hz, 1 hr/axis
- **Ingress Protection** IP40

Installation Scenario

DIN-rail mounting illustration

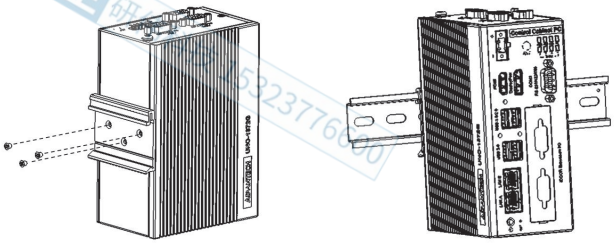

All product specifications are subject to change without notice.

Dimensions

Unit: mm

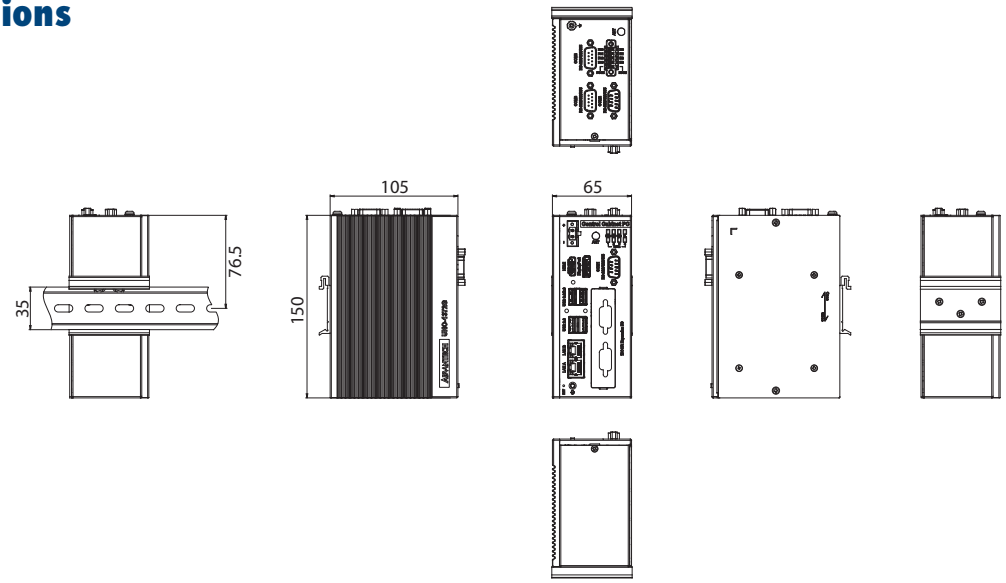

Front I/O View

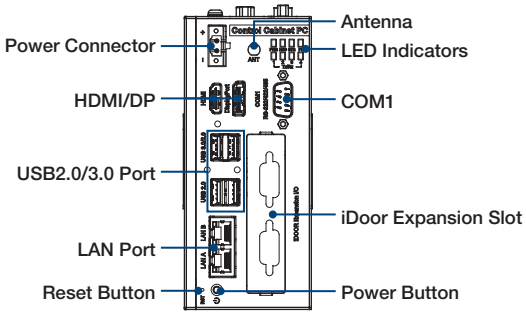

Top I/O View

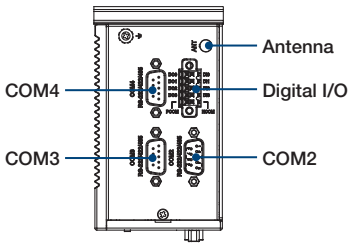

Ordering Information

- **UNO-1372G-J021AE** Intel Celeron J1900, 2GHz, 4GB DDR3L, 2 x LAN, iso. 4 x COM, 4 x USB, iso. 4 DI/4DO, iDoor

iDoor Modules

- **PCM-23U1DG-BE** Internal locked USB Slot for USB Dongle
- **PCM-24R2GL-AE** 2-Port Gigabit Ethernet, mPCIe, RJ45
- **PCM-24D2R2-BE** 2-Port Isolated RS-232 mPCIe, DB9
- **PCM-24D4R2-BE** 4-Port Non-Isolated RS-232 mPCIe, DB37
- **PCM-24S2WF-BE** WiFi 802.11 ac/a/b/g/n 2T2R w/Bluetooth 4.1
- **PCM-24S33G-AE** Wide-Temp 3.75G HSPA and GPS, 2-in-1, Full-size mPCIe w/ Redundant SIM Card holder, 2-port SMA
- **PCM-26R2PN-MAE** 2-Port Hilscher netX100 FieldBus mPCIe, PROFINET, RJ45, Master
- **PCM-26R2PN-SAE** 2-Port Hilscher netX100 FieldBus mPCIe, PROFINET, RJ45, Slave
- **PCM-26D1DB-MAE** 1-Port Hilscher netX100 FieldBus mPCIe, PROFIBUS, DB9, Master
- **PCM-26D1DB-SAE** 1-Port Hilscher netX100 FieldBus mPCIe, PROFIBUS, DB9, Slave

Optional Accessories

Adapter & Power cable

- **PWR-247-DE** 100-240V 60W 24V 2.5A Power Supply
- **1702002600** Power Cable US Plug 1.8 M (Industrial Grade)
- **1702002605** Power Cable EU Plug 1.8 M (Industrial Grade)
- **1702031801** Power Cable UK Plug 1.8 M (Industrial Grade)
- **1700000596** Power Cable China/Australia Plug 1.8 M (Industrial Grade)

DIN-Rail Power Supply

- **UNO-IPS2460-AE** 60Watts Compact Size DIN-Rail Power Supply

Embedded O/S

- **20703WE7PS0001** Img WS7P x64 MUI v4.18 B010 UNO-1372G-J0xxAE
- **20703LEB1S0080** Image AdvLinuxTu V2.0.5 for UNO series
- **20703WE7PS0012** Img WS7P x86 MUI V4.18 B022 for UNO-1372G-J0xxAE
- **20703WX6HS0014** Img WIN10 LTSB v6.03 B003 UNO-1372G-J0xxAE
- **20703WX9ES0029** Img W10 LTSC V6.05 B026 UNO-1372G-J0xxAE Entry

Please note: If some optional modules are offered with the system, additional system certificates may be required in certain regions/countries.
Please contact Advantech for certificate compliance.