UNO-148

Regular Fanless DIN Rail Controller with 11th gen Intel® Core™ i processor

Features

- 11th gen Intel® Core™ i processor with 8 GB DDR4 memory
- Wide operating temperature range (-20 ~ 60 °C/-4 ~ 140 °F)
- 8 x DI, 8 x DO, and 4 x COM with isolation protection
- 1 x M.2 (M key) for 2280 NVMe SSD storage
- 1 x M.2 (B key) for 2242 storage and 3042/3052 cellular modules
- 1 x M.2 (E key) for 2230 Wi-Fi modules
- Supports Time-Sensitive Networking (TSN) technology
- Remote out-of-band (OOB) power management with Advantech's iBMC technology
- Embedded TPM 2.0 for hardware-based security
- Modular design for optional iDoor extension
- Compliant with IEC 61010-2-201 safety requirements

Introduction

Advantech's UNO-100 series are DIN-rail integrated controller that feature a modular design for flexible configuration according to specific usage requirements.

UNO-148 is equipped with an 11th Generation Intel® Core™ i Processor with 8GB DDR4 RAM, and 3 x LAN, 4 x COM, 3 x USB 3.0, 1 x USB 2.0, 8 x DI, 8 x DO, and 2 x DP 1.4. The controller also supports 1 x full-size mini PCIe, 1 x M.2 B key,1 x M.2 M Key, 1 x M.2 E key, and 1 x nano SIM card slot for convenient expansion to satisfy diverse industrial applications. Compliant with IEC 61010-1 safety requirements for industrial use, UNO-148 can be equipped with an optional second-stack extension kit that supports Advantech's iDoor technology for integrating additional industrial Fieldbus, wireless communication, I/O, and peripheral modules.

Specifications

General

- **Certification** CE, FCC, UL 61010-2-201, BSMI
- **Dimensions (W x D x H)** 35 x 140 x 200 (1.4 x 5.5 x 7.8 in)
- **Form Factor** Regular size
- **Enclosure** Aluminum housing
- **Mount Option** DIN Rail
- **Weight (Net)** 1.3 kg / 2.86 lb
- **Power Requirement** 10 ~ 36 V_{DC}
- **Power Consumption** 31W (typical), 55W (max.)
  - For UNO-148-IS2EA (iDoor+SATA): 61W max.
  - For UNO-148-P11EA (PCIe x4): 76W max.
- **OS Support** Win 10 2019 LTSC, AdvLinux (Ubuntu 18.04)

System Hardware

- **BIOS** AMI UEFI 256Mbit
- **Watchdog Timer** Programmable timer with 255 intervals (1 ~ 255 sec)
- **Security** TPM2.0
- **Processor** Intel® Core™ i7-1185G7E quad-core, 1.8 GHz (up to 4.4 GHz)
  Intel® Core™ i5-1145G7E quad-core, 1.5 GHz (up to 4.1 GHz)
  Intel® Core™ i3-1115G4E dual-core, 2.2 GHz (up to 3.9 GHz)
- **Memory** 8 GB DDR4 SODIMM-3200 (up to 64 GB with 2 x slots)
- **Graphics Engine** Intel® Iris® X
- **Ethernet** LAN A: Intel® i225-AT 2.5GbE, IEEE 802.3AZ/802.1AS
  LAN B: Intel® i210-IT GbE, IEEE 802.3AZ/802.1AS
  LAN C: Intel® i219-LM GbE, IEEE 802.3AZ/802.1AS
- **TSN** Supported via i225 LAN port
  IEEE 802.1Qav/802.Qbv
- **LED Indicators** 1 x Power, 1 x RTC battery, 1 x LAN (active, status), and 1 x programmable indicator
- **Expansion** 1 x Full-sized mPCIe (PCIe/USB 2.0 signals)
  1 x M.2 (E key) for 2230 Wi-Fi modules (PCIe signals)
  1 x M.2 (M key) for 2280 NVMe (PCIe x4 signals)
  1 x M.2 (B key) for 2242 SSD (SATA signals) or 3042/3052 cellular modules (USB Signals)
  1 x nano SIM card slot

I/O

- **Isolated Serial Ports** 4 x RS-232/422/485 (terminal block)
  50 ~115.2 kbps (isolation protection: 2500 V_{DC})
- **LAN** 2 x 10/100/1000BASE-T Fast Ethernet (RJ45)
  1 x 10/100/1000/2500BASE-T Fast Ethernet (RJ45)
- **USB** 3 x USB 3.2 (Gen 2), 1 x USB 2.0 (Type A)
- **Isolated DI/O** 8 x Digital input channels with 2500 V_{DC} isolation protection
  - Wet contact: Logic 0: 10 ~ 30 V_{DC}/ Logic 1: 0 ~ 3 V_{DC}
  - Dry contact: Logic 0: Shorted to GND/ Logic 1: Open

  8 x Digital output channels
  - Output voltage: 5 ~ 30 V_{DC}
  - Output capability sink: 500 mA max./channel
- **Displays** 2 x DP 1.4, up to 7680 x 3840 (8K) @ 60 Hz
- **Power Connector** 1 x 2-pin terminal block

Environmental

- **Operating Temperature** For TDP @ 15W, -20 ~ 60 °C/-4 ~ 140 °F
  For TDP @ 22W, -20 ~ 50 °C/-4 ~ 122 °F with fan kit
- **Storage Temperature** -40 ~ 85 °C/-40 ~ 185 °F
- **Relative Humidity** 95% RH @ 40 °C/104 °F, non-condensing
- **Shock Protection** Operating, IEC 60068-2-27, 50G, half sine, 11ms
- **Vibration Protection** Operating, IEC 60068-2-64, 4Grms, random, 5 ~ 500Hz, 1hr/axis (SSD)
  Operating, IEC 60068-2-64, 0.3Grms, random, 5 ~ 500Hz, 1hr/axis (HDD)
- **Ingress Protection** IP20

昊牛 研华科技 15323[illegible]

Dimensions

Unit: mm

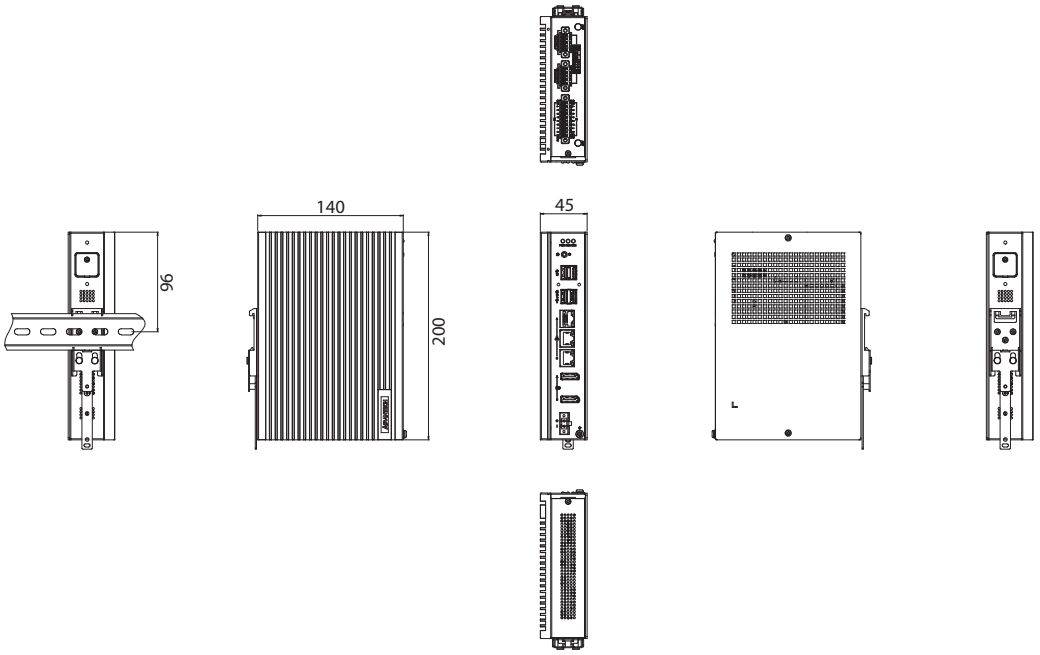

(With optional extension kit)

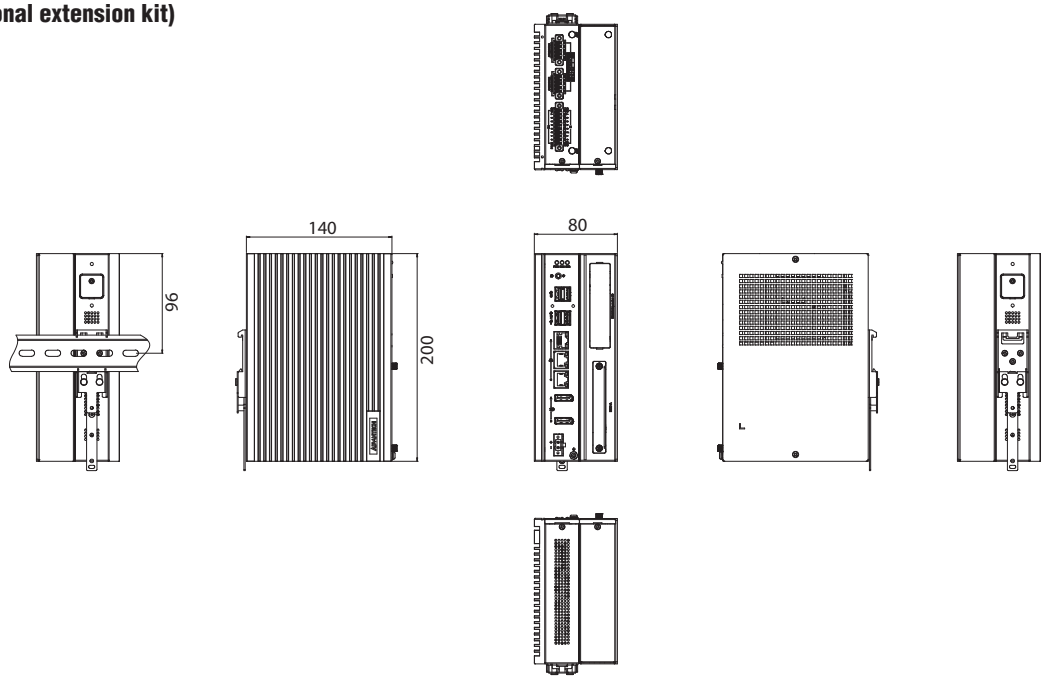

Front I/O

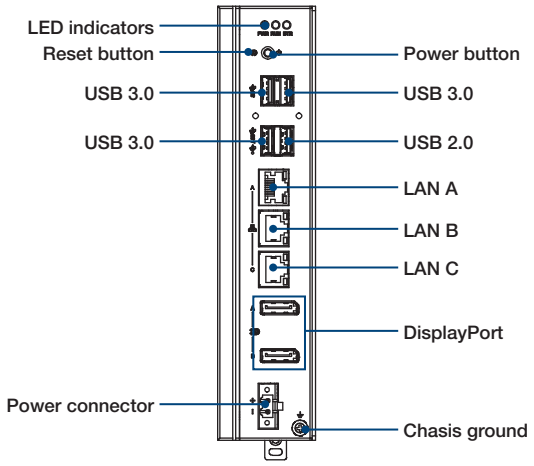

Top I/O

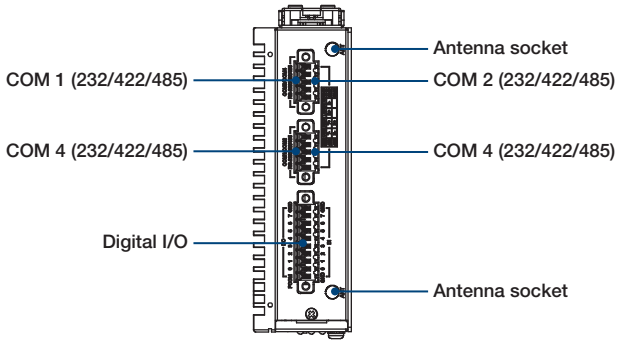

Ordering Informtion

- **UNO-148-B73BA** DIN-rail controller with Intel® Core™ i7-1185G7E quad-core (up to 4.4 GHz), 8 GB DDR4, 3 x LAN, 4 x COM, 4 x USB, 8 x DI/O
- **UNO-148-B53BA** DIN-rail controller with Intel® Core™ i5-1145G7E quad-core (up to 4.1 GHz), 8 GB DDR4, 3 x LAN, 4 x COM, 4 x USB, 8 x DI/O
- **UNO-148-B33BA** DIN-rail controller with Intel® Core™ i3-1115G4E dual-core (up to 3.9GHz), 8 GB DDR4, 3 x LAN, 4 x COM, 4 x USB, 8 x DI/O

Extension Kit

- **UNO-148-IS2EA** Extension kit with 1 x iDoor slot + 2.5" SSD/HDD Storage slot
- **UNO-148-P11EA** Extension kit with 1 xPCIe x4 slot

(Refer to the extension kit datasheet for more details)

Optional Accessories

DIN-Rail Power Supply

- **96PSD-A120W24-MN** A/D 100 ~ 240V, 120W, 24V NDR DIN rail
- **PSD-A120W24** DIN rail A/D 100 ~ 240V, 120W, 24V

Adapter & Power Cable

- **96PSA-A120W19T2-3** Adaptor A/D 100-240V 120W 19V C14 cord end 62368
- **1702002600** Power cable US plug, 1.8 M (industrial grade)
- **1702002605** Power cable EU plug, 1.8 M (industrial grade)
- **1702031801** Power cable UK plug, 1.8 M (industrial grade)
- **1700000596-11** Power cable China/Australia plug, 1.8 M (industrial grade)

Extension kit

Advantech offers an optional second-stack extension kit for expanding the system functionalities

UNO-148-IS2EA

2nd Stack extension kit with 1 x iDoor slot + 1 x 2.5" SSD/HDD slot

Specifications

General	
Ports	1 x iDoor Slot 1 x 2.5 SSD/HDD
Interface (signal)	mPCIe (PCIe / USB2.0) 2.5"SSD/HDD (SATA)
Dimensions (W x D x H)	45 x 140 x 200 mm/1.7 x 5.5 x 7.8 in
Weight	0.4 kg (0.8 lb)

Ordering Information

Part Number	Description
UNO-148-IS2EA	UNO-148 2nd-stack extension kit with 1 x iDoor + 1 x 2.5" SSDHDD

Supported iDoor Modules

iDoor Industrial Fieldbus Communication	
PCM-26D2CA-AE	2-port isolated CANBus mPCIe,CANopen, DB9
PCM-26D1DB-MAE/SAE	1-port Hilscher netX100 FieldBus mPCIe,PROFIBUS, DB9, Master/Slave
PCM-26R2PN-MAE/SAE	2-Port Hilscher netX100 FieldBus mPCIe, PROFINET,RJ45, Master/Slave
PCM-26R2EC-MAE/SAE	2-port Hilscher netX100 FieldBus mPCIe, EtherCAT, RJ45,Master/Slave
PCM-26R2EI-MAE/SAE	2-port Hilscher netX100 FieldBus mPCIe, EtherNet/IP, RJ45,Master/Slave
PCM-26R2S3-MAE/SAE	2-port Hilscher netX100 FieldBus mPCIe, Sercos III, RJ45,Master/Slave
PCM-26R2PL-SAE	2-port Hilscher netX100 FieldBus mPCIe, POWERLINK, RJ45
iDoor Smart Digital/Analog I/O	
PCM-24D2R4-BE	2-port isolated RS-422/485, mPCIe, DB9
PCM-24D2R2-BE	2-port isolated RS-232, mPCIe, DB9
PCM-24D4R4-BE	4-port non-isolated RS-422/485 mPCIe, DB37 cable
PCM-24D4R2-BE	4-port non-isolated RS-232 mPCIe, DB37 cable
PCM-24R1TP-BE	1-port Gigabit Ethernet, Intel® i225, mPCIe, RJ45
PCM-24R2PE-AE	2-port Gigabit Ethernet, IEEE 802.3af (PoE)- compliant,mPCIe, RJ45
PCM-24R2GL-AE	2-port Gigabit Ethernet, Intel® i350, mPCIe, RJ45
PCM-27D24DI-AE	24-channel isolated digital I/O with counter mPCIe, DB37
iDoor CORE	
PCM-2300MR-AE	MR4A16B, MRAM, 2 MB, mPCIe
PCM-23C1CF-BE	1 x CFast slot with cover protection
PCM-23U1DG-CE	USB slot w/ lock for USB dongle, half-size mPCIe
PCM-24U2U3-BE	2-port USB 3.0, mPCIe, USB-A type
PCM-27J3AU-AE	3-port audio stereo, mPCIe, 3.5-mm jack
iDoor Wired/Wireless Communication	
PCM-24S2WF-BE	Wi-Fi 802.11 a/b/g/n 2T2R w/Bluetooth 4.0, half-size mPCIe, antennas
PCM-24S34G-EBE	LTE/HSPA+/GPRS and GPS, full-size mPCIe, 4G/GPS antennas for EMEA/APAC
C-PCM-24S24G-4AV-1	Cellular iDoor module, LTE Cat. 4 for AT&T/Verizon
C-PCM-24S24G-1A-1	Cellular iDoor module, LTE Cat. 1 for AT&T
C-PCM-24S24G-1V-1	Cellular iDoor module, LTE Cat. 1 for Verizon
C-PCM-24S24G-MAV-1	Cellular iDoor module, LTE Cat. M1 for AT&T/Verizon

Extension kit

Advantech offers an optional second-stack extension kit for expanding the system functionalities

UNO-148-P11EA

Second-stack extension kit with 1 x PCIe x4 expansion kit

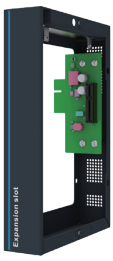

Specifications

General	
Ports	1 x PCIe x4 slot
Dimensions (W x D x H)	35 x 140 x 200 mm/1.18 x 5.51 x 7.87 in
Weight	0.5 kg/1.1 lb

Notes

1. When UNO-148-P11EA is installed, the PCIe signals of the mPCIe port (Mini1) and SATA signals of the M.2 B-key (CN14) socket are occupied by the expansion kit and cannot be used.
2. Because of the power used by PCIe x4, the recommended power input for UNO-148 is 24 V_{DC} (±20%).

Ordering Information

Part Number	Description
UNO-148-P11EA	UNO-148 Second-stack Extension kit, 1 PCIe x4 slot