UNO-127

Compact Fanless Edge Controller

Features

- Intel® Quad core x6413E processor with 4GB/8GB DDR4 onboard memory
- Compact, robust, fanless and cable-free system with high stability
- Optimized basic unit with 2 x GbE, 2 x USB, 1 x HDMI
- On board full-Size mPCIe port for various expansion capability
- Built-in TPM2.0 for hardware-based security
- System ground isolation design
- Certified with IEC 61010-2-201 for industrial application

Introduction

Advantech's UNO-100 series are DIN-rail integrated controller that feature a modular design for flexible configuration according to specific usage requirements.

UNO-127 is equipped with an Intel® Atom® 6413E processor, 4 or 8 GB DDR4 RAM, and 64G eMMC storage, as well as 2 x LAN, 2 x USB and 1 x HDMI. It also supports 1 x full-size mini PCIe for convenient expansion to satisfy diverse industrial applications. Compliant with IEC 61010-1 certification requirements for industrial use, UNO-127 can be equipped with an optional second-stack extension kit that supports additional 4 x COM ports and 1 x M.2 B key for I/O and wireless connectivity expansion.

Specifications

General

- **Certification** CE, FCC, UL, CCC, BSMI
- **Dimensions (W x D x H)** 33.5 x 70 x 100 (1.3" x 2.8" x 3.9")
- **Form Factor** Pocket sized
- **Enclosure** Aluminum Housing
- **Mounting** DIN-rail mount
- **Weight (Net)** 0.5 kg (1.1lbs)
- **Power Requirement** 10 ~ 30V_{DC}
- **Power Consumption** 15.8W (Typical), 35W (Max)
- **Operating System** Windows10 LTSC, Ubuntu 20.04, Ubuntu Core 20
- **Software Compatibility** Canonical Ubuntu Core 20 certification
WISE-DeviceOn
WISE IoT Edge

System Hardware

- **BIOS** AMI EFI X64
- **Watchdog Timer** Programmable 255 levels timer interval, from 1 to 255 sec
- **Processor** Intel® Atom® Quad core x6413E, 1.5GHz
- **Memory** 4 GB/8 GB DDR4 2666 MHz onboard
- **Graphics Engine** Intel® UHD Graphics
- **Ethernet** 2 x i210-IT
- **LED Indicators** LEDs for Power, RUN (Programmable), LAN (Active, Status)
- **Storage** Onboard 64GB eMMC (upgradeable up to 256GB by project)
Option mSATA shared with mPCIe slot
- **Expansion** 1 x Full-size mPCIe slot (SATA/PCIe/USB2.0 signal)
- **Hardware Security** TPM2.0 (TPM2.0 Library Reversion 1.38)

I/O Interfaces

- **LAN Ports** 2 x RJ45, 10/100/1000 Mbps IEEE 802.3u 1000BASE-T Fast Ethernet
- **USB Ports** 2 x USB 3.2 GEN1
- **Display Output** 1 x HDMI (1920 x 1080 @60Hz)
- **Power Connector** 1 x 2 Pins, Terminal Block

Environment

- **Operating Temperature** -20 ~ 60°C (-4 ~ 140°F) @ 5 ~ 85% RH with 0.7 m/s
- **Storage Temperature** -40 ~ 85°C (-40 ~ 185°F)
- **Relative Humidity** 10 ~ 95% RH @ 40 °C/104 °F, non-condensing
- **Shock Protection** Operating, IEC 60068-2-27, 50G, half sine, 11 ms
- **Vibration Protection** Operating, IEC 60068-2-64, 2 Grms, random, 5 ~ 500 Hz, 1hr/axis (mSATA)
- **Ingress Protection** IP30

Installation Scenario

DIN-rail Mount Illustration

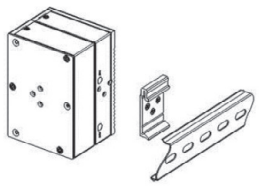

All product specifications are subject to change without notice.

Dimensions

Unit: mm

Base Unit

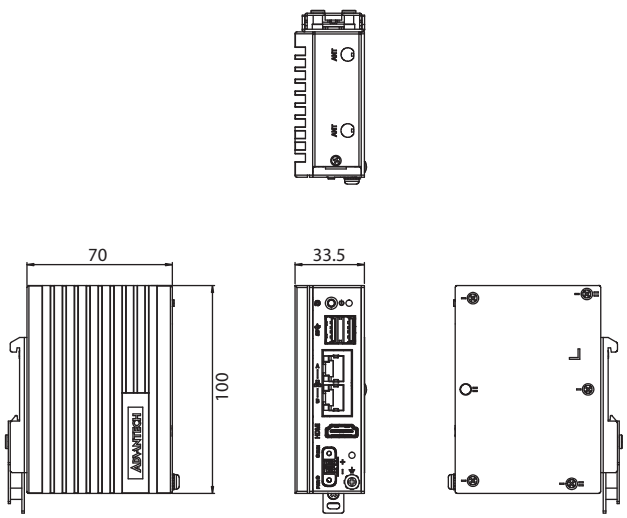

With Extension kit

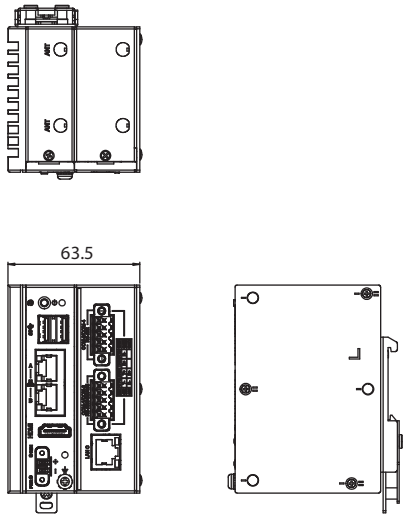

Front I/O View

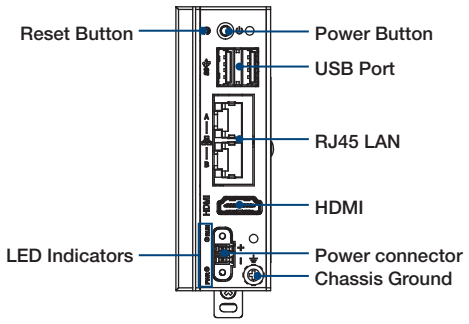

Top I/O View

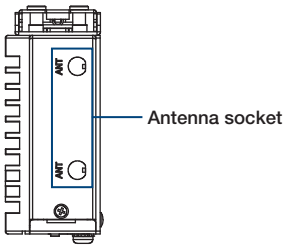

Ordering Information

- **UNO-127-E22BA** Intel® Atom® Quad core x6413E, 4G RAM with 2 x GbE, 2 x USB, 1 x mPCIe, HDMI, 64G eMMC
- **UNO-127-E23BA** Intel® Atom® Quad core x6413E, 8G RAM with 2 x GbE, 2 x USB, 1 x mPCIe, HDMI, 64G eMMC

Embedded O/S

- **20704U20CS0000** Ubuntu Core 20 - Intel IOTG version_20211213
- **20704U20DS0000** Ubuntu Desktop - Intel IOTG version_20211203
- **20704U20DS0001** Image AdvLinuxTu V3.0.4 for UNO series

Optional Accessories

DIN-Rail Power Supply

- **UNO-IPS2460-AE** A/D 100-240V 60W 24V Compact DIN-rail power supply
- **96PSD-A60W24-MM** A/D 100-240V 60W 24V MDR DIN-rail power supply

Adapters & Power cords

- **PWR-247-DE** 60W AC to DC UNO series power adapter
- **1702002600** Power Cable US Plug 1.8 M
- **1702002605** Power Cable EU Plug 1.8 M
- **1702031801** Power Cable UK Plug 1.8 M
- **1700000596** Power Cable China/Australia Plug 1.8 M

Wi-Fi Module (mPCIe) and Antenna

- **EWM-W193H01E** Wifi 802.11ac/a/b/g/n, Bluetooth 5.0
- **9656EWMG00E** (Half-size to full size mPCIe bracket)
- **1750008800-01** Coaxial cable for antenna L100mm
- **1750008717-01** Antenna L=10.9 cm 50 Ohm

LTE Module (mPCIe) and Antenna

- **968AD00589** Quectel EG25G LTE Module Cat. 4, Mini-PCIe with Sim Holder
- **1750007990-01** Antenna 4G/LTE full band L=11 cm 50 Ohm
- **1750006264** Antenna SMA(F)/MHF 15cm cable

Stackable Extension Kits

UNO-127-RS1EA

Second stack module with 4 x COM, 1 x LAN, 1 x M.2 B key

Front I/O View

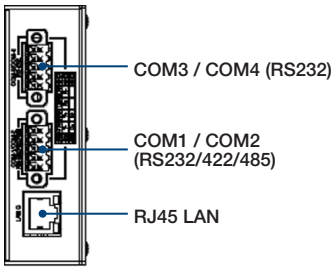

Top I/O View

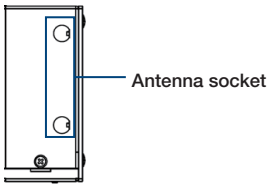

Specifications

General	
I/O Ports	2 x isolated RS-232/422/485, terminal block 2 x isolated RS-232, terminal block 1 x RJ45, 10/100/1000 Mbps IEEE 802.3u
Expansion	1 x M.2 B Key (SATA/ USB 3.0 signal)
Sim slot	1 x nano SIM Slot
Dimensions	100 x 70 x 30 mm
Weight	145g
Environment	
Operating Temperature	-20~ 60 °C

Ordering Information

P/N	Description
UNO-127-RS1EA	UNO-127 2nd stack with 4 x COM, 1 x LAN, 1 x M.2 B key

Optional Accessories

LTE Wireless module (M.2 B key) & antenna

P/N	Description
968AD00590	Quectel EM06-E LTE Cat-6 M.2 module (EMEA/Brazil/APAC)
1750008879-01	RF SMA cable for LTE(150mm)
1750008303-01	Antenna

5G NR Sub6 Wireless module(M.2 B Key) & antenna

P/N	Description
AIW-355-DQ-E01	5G(Sub-6G)/LTE/WCDMA module, with GNSS, for EU
AIW-355-DQ-N01	5G(Sub-6G)/LTE/WCDMA module, with GNSS, for US
AIW-355-DQ-C01	5G(Sub-6G)/LTE/WCDMA module, with GNSS, for China
1750008569-01	Coaxial Cable, 300 mm/11.8 in, SMA (F) to MFH4
1750009372-01	5G(Sub-6G)/LTE/WCDMA full band dipole antenna
UNO-M2-3052HS	M.2 3052 B key heat sink kit for 5G module