SPC-815/SPC-821

15.6" HD TFT LED LCD/21.5" Full HD TFT LED LCD Standalone Multi-Touch Panel Computer

Features

- 15.6"/21.5" (Full) HD TFT LED LCD display
- Intel® Core™ i3-6100U dual-core, 2.3 GHz processor
- 16:9 widescreen with P-CAP multi-touch control
- Built-in function keys for intuitive operation
- Scratch-resistant touch panel with 7H surface hardness
- Silicone-free enclosure with all-round IP65-rated protection
- Supports CP 40 (Rittal) and CS-480 B.Flex (Bernstein) mount standards
- Front-facing USB ensures easy maintenance
- Supports the RAFI FS22+ Series pushbuttons

Introduction

SPC-800 is an arm-mounted HMI that can be integrated with an extension unit that supports RAFI FS22+ Series pushbuttons. Designed to support diverse industrial mounting standards, such as CP 40 (Rittal) and CS-480 (Bernstein), SPC-800 provides a versatile HMI that can be installed in a variety of intelligent factories and machines. The SPC-800 is powered by an Intel® Core™ i3-6100U 2.3 GHz processor that delivers advanced graphical performance to facilitate the realization of field IoT applications. The HMI is also equipped with a silicone-free enclosure that features all-around IP65-rated protection from water and dust. Moreover, with the inclusion of an I/O cover, all cables can be hidden for a tidy appearance and simplified wiring installation..

Specifications

General

- **Certification** CCC, CE, FCC Class A, UL
- **Cooling System** Fanless design
- **Dimensions (W x H x D)** SPC-815:
  402.19 x 333.19 x 67 mm/15.83 x 13.11 x 2.63 in (without flange for arm mount)
  402.19 x 333.19 x 160 mm/15.83 x 13.11 x 6.29 in (with flange for arm mount)
  SPC-821:
  546.69 x 420.34 x 67 mm/21.52 x 16.54 x 2.63 in (without flange for arm mount)
  546.69 x 420.34 x 160 mm/21.52 x 16.54 x 6.29 in (with flange for arm mount)
- **Enclosure** Front bezel: Die-cast aluminum alloy
  Rear housing: Die-cast aluminum alloy
  Front push button bracket : metal sheet
- **Mount Options** Pole Mount : Supports Rittal CP40 and Bernstein CS-480 B.Flex arm system dimension
  VESA Mount (Optional)
- **OS Support** Microsoft® Windows 10 Enterprise LTSB
- **Power Consumption** 35 W Typical, Max. 60 W Typical
- **Power Input** 24 V_{DC}
- **Weight (Net)** 21.5": 10.6 kg/23.3 lb
  15.6": 8.2kg/18.1 lb

System

- **CPU** Intel® Skylake U-series Processor
  Intel® Core™ i3-6100U, 2.3 GHz
  i7-6600U, 2.6 GHz (optional)
  i5-6300U, 2.4 GHz (optional)
  Celeron® 3955U, 2.0 GHz (optional)
- **Memory** 8 GB SODIMM DDR3L SDRAM, up to 16 GB RAM
- **LAN** 2 x 10/100/1000 BASE-T
- **Expansion Slots** 1 x Full-sized mini PCIe (optional)
- **Storage** 1 x 2.5" SATA HDD bracket
- **I/O** 1 x USB 2.0 (front)
  2 x USB 3.0
- **COM Port** 2 x 2 x RS-232/422/485 (optional)

LCD Display

- **Display Type** 21.5" Full HD TFT LED
  15.6" HD TFT LED (FHD optional)
- **Display Size** 21.5"/15.6"
- **Max. Resolution** 21.5": 1920 x 1080
  15.6": 1366 x 768
- **Max. Colors** 16.7 M
- **Luminance** 250 (21.5")/400 cd/m² (15.6")
- **Viewing Angle (H/V)** 21.5": 178°/178°
  15.6": 170°/130°
- **Backlight** 50,000 hr lifetime

Touchscreen

- **Light Transmission** ≥88%
- **Resolution** 4096 x 4096 dots
- **Type** Projected capacitive

Environment

- **Humidity** 10 ~ 95% RH @ 40 °C/104 °F, non-condensing (tested for 48 hrs)
- **Ingress Protection** All-round IP65 rating
- **Operating Temperature** 0 ~ 55 °C (32 ~ 131 °F)
- **Storage Temperature** -20 ~ 60 °C (-4 ~ 140 °F)
- **Vibration Protection** With SSD: 1 Grms (5 ~ 500 Hz) (Operating, random vibration)

Modular Ordering Information

Base Unit

- **SPC-821-633A** IP65-rated standalone panel PC with 21.5" FHD, P-CAP touch, front USB, Intel i3-6100U CPU,8 GB RAM
- **SPC-815-633A** IP65-rated standalone panel PC with 15.6" FHD, P-CAP touch, front USB, Intel i3-6100U CPU,8 GB RAM

Push Button Panel

- **SPC-821-PBEK** 21.5" push button panel, 1x emergency button, 1x green button, 1x red button, 1 x blue button with PCBA
- **SPC-815-PBEK** 15.6" push button panel, 1x emergency button, 1x green button, 1x red button, 1 x blue button with PCBA
- **SPC-821-WOEK** 21.5" push button panel, w/o push button,w/o PCBA
- **SPC-815-WOEK** 15.6" push button panel, w/o push button, w/o PCBA

All product specifications are subject to change without notice.

Dimensions

Unit: mm [inch]

SPC-815

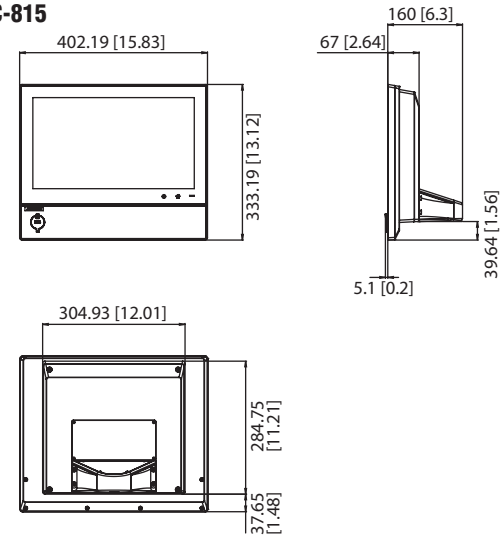

SPC-821

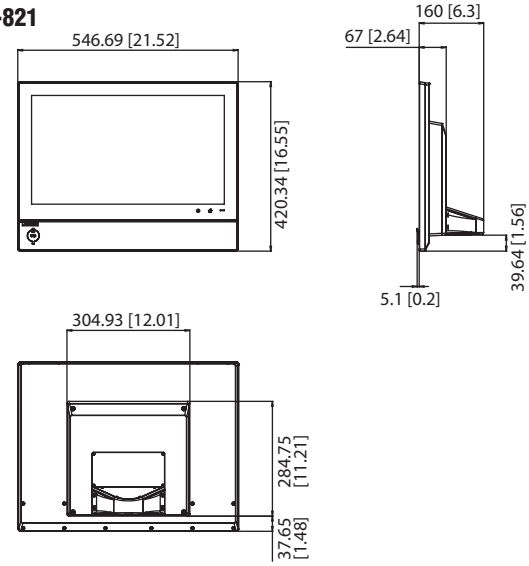

Optional Accessories

- **1702002600** Power cable US plug 1.8 M
- **1702002605** Power cable EU plug 1.8 M
- **1702031801** Power cable UK plug 1.8 M
- **1700000596** Power cable China/Australia plug 1.8 M
- **9656EWMG00E** Half-size mini PCIe to full-size mini PCIe bracket set
- **96PSA-A120W24T2** Adapter 100 ~ 240V 120W 24V 5A
- **20703WX9HS0014** Img W10 LTSC V6.05.017 SPC-815/821-6xxAE High (For Core i7 version)
- **20703WX9VS0017** Img W10 LTSC V6.05.017 SPC-815/821-6xxAE Value (For core i3 / Celeron use)

For Supporting WOEK expand button

- **98R30800P01** Emergency push button PCBA with cable
- **98R30800P04** 3 push button PCBA with cable
- **98R30800P06** 2 push button PCBA with cable
- **98R30800P05** 1 push button PCBA with cable

Rear View

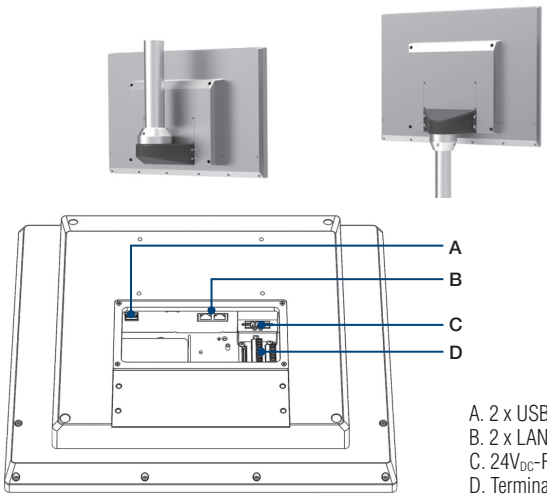

A. 2 x USB3.0
B. 2 x LAN
C. 24V_{DC}-Power Supply
D. Terminal Board

Push Button Pin Definition

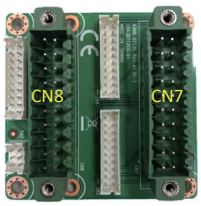

CN8			
10	S3 NC	20	GND
9	S3 NO	19	S4 LED (+24V)
8	S3 COM	18	S3 LED (+24V)
7	S2 NC	17	S2 LED (+24V)
6	S2 NO	16	S5 NC
5	S2 COM	15	S5 NO
4	S1 NC2	14	S5 COM
3	S1 COM2	13	S4 NC
2	S1 NC1	12	S4 NO
1	S1 COM1	11	S4 COM

CN7			
10	S5 LED (+24V)	20	GND
9	S8 NC	19	GND
8	S8 NO	18	S7 LED (+24V)
7	S8 COM	17	S6 LED (+24V)
6	S7 NC	16	S10 NC
5	S7 NO	15	S10 NO
4	S7 COM	14	S10 COM
3	S6 NC	13	S9 NC
2	S6 NO	12	S9 NO
1	S6 COM	11	S9 COM