# TPC-1551WP

## 15.6" WXGA TFT LED LCD Thin-Client Terminal with Intel® Atom™ Processor

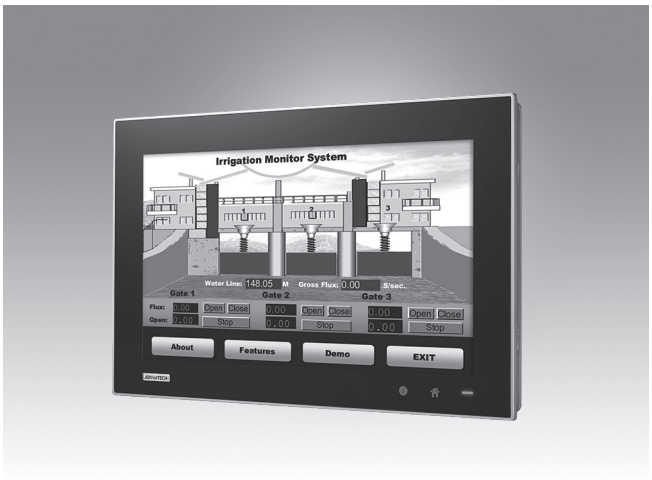


## Features

- Industrial-grade 15.6" WXGA TFT LCD with 50K lifetime and LED backlight
- Intel® Atom™ E3827 1.75 GHz dual-core processor with 4 GB DDR3L SDRAM
- 16:9 widescreen display with PCAP multi-touch control
- IP66-rated front panel and panel mount
- Built-in intelligent home key and iKey for intuitive operation
- Front-facing LED indicators to show operating status
- Supports Advantech's iDoor technology for integrating optional accessories
- Chassis grounding protection
- Anti-scratch surface with 7H hardness
- Supports AC/DC input with optional power adapter
- Supports Advantech's SNMP Subagent software
- Supports Advantech's WISE-PaaS/RMM remote management software

## Introduction

The TPC-1551WP thin-client terminal is equipped with a 15.6" SXGA TFT LCD, low-power Intel® Atom™ E3827 1.75 GHz dual-core processor, and 4 GB DDR3L SDRAM to deliver sufficient computing performance in a compact, fanless system. For enhanced durability, TPC-1551WP features a true-flat touchscreen with IP66-rated front panel, die cast aluminum alloy front bezel, and projected capacitive touch control. Because of the system's compact but robust design, it can be easily deployed into existing infrastructure. Moreover, Advantech's iDoor technology can be integrated via the mini PCIe slot in order to provide additional I/O connectors, isolated digital I/O, fieldbus protocols, 3G/GPS/GPRS/Wi-Fi communication, and MRAM to support diverse industrial automation applications.

## Specifications

### General

- **BIOS** AMI UEFI
- **Certification** BSMI, CCC, CE, FCC Class A, UL
- **Cooling System** Fanless design
- **Dimensions (W x H x D)** 419.7 x 269 x 61.9 mm (16.52 x 10.59 x 2.44 in)
- **Enclosure** Front bezel: Die cast aluminum alloy<br>Back housing: SECC
- **Mount Options** Desktop, wall, and panel mount
- **OS Support** Microsoft® WES7 (32/64-bit), Windows 7 (32/64-bit), Windows 10 Enterprise LTSB
- **Power Input** 24 $V_{DC}$ ± 20%
- **Power Consumption** 48 W (Typical)
- **Watchdog Timer** 1 ~ 255 sec (system)
- **Weight (Net)** 5 Kg (11.02 lbs)

### System Hardware

- **CPU** Intel® Atom™ E3827 1.75 GHz Processor
- **Memory** 4 GB (Optional 8 GB) DDR3L 1600 MHz SODIMM SDRAM
- **LAN** 2 x 10/100/1000BASE-T
- **Expansion Slots** 1 x Full-size mini PCIe
- **Storage** 1 x CFast<br>1 x 2.5" SATA SSD (optional)
- **I/O** 1 x RS-232<br>1 x RS-232/422/485<br>1 x USB 3.0<br>1 x USB 2.0

### LCD Display

- **Display Type** WXGA TFT LED LCD
- **Display Size** 15.6"
- **Max. Resolution** 1366 x 768
- **Max. Colors** 16.7M
- **Luminance cd/m2** 400
- **Viewing Angle (H/V°)** 170/160
- **Backlight Life** 50,000 hr
- **Contrast Ratio** 500:1

### Touchscreen

- **Light Transmission** 90% ± 3%
- **Resolution** 2048 x 2048 dot
- **Type** Projected capacitive

### Environment

- **Humidity** 10 ~ 95% RH @ 40 °C, non-condensing
- **Ingress Protection** Front panel: IP66
- **Operating Temperature** 0 ~ 55 °C (32 ~ 131 °F)
- **Storage Temperature** -20 ~ 60 °C (-4 ~ 140 °F)
- **Vibration Protection** With HDD: 1 Grms (5 ~ 500 Hz) (Operating, random vibration)

## Rear View

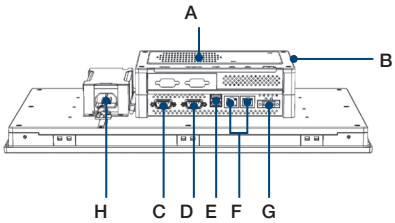


A. External HDD/iDoor kit (TPC-1251T-EHKE) (optional)
B. CFast slot
C. RS-232
D RS-232/422/485
E. USB 3.0 & 2.0
F. LAN (10/100/1000)
G. Power receptor
H. Power adapter and bracket (optional)


All product specifications are subject to change without notice.

## Dimensions

Unit: mm [inch]

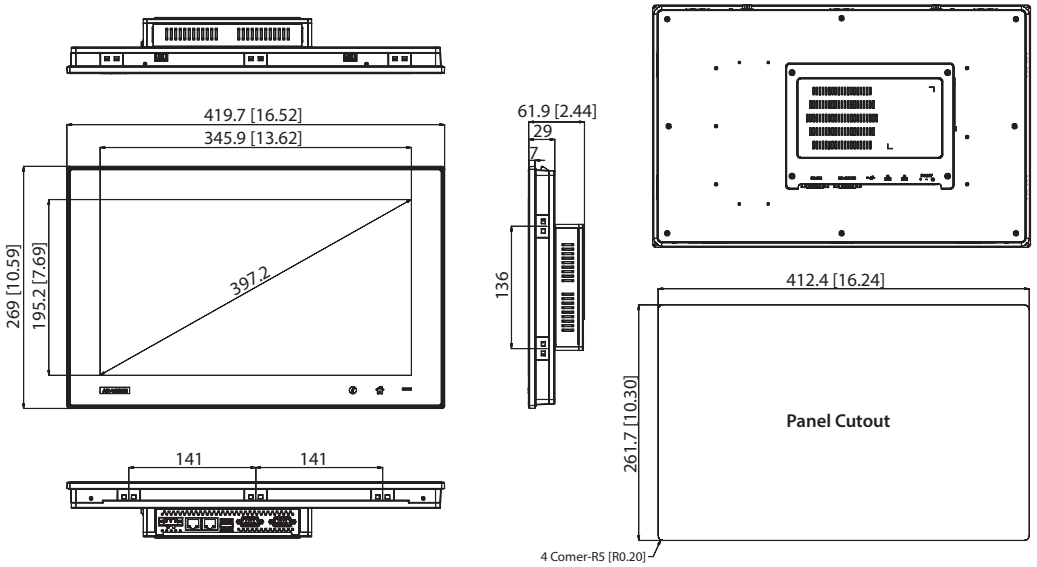


**TPC-1551WP Panel Cutout Dimensions: 412.4 x 261.7 mm (16.23 x 10.30 in)**

## Ordering Information

- **TPC-1551WP-E3AE** 15.6" Multi-Touch Panel PC, Intel Atom E3827, 4GB DDR3L pre-installed

## Optional Accessories

- **TPC-1000H-ADKE** 63W DC 24V/2.62A Power supply & bracket for TPC-xx51WP series
- **TPC-1251T-EHKE** HDD and iDoor extension kit
- **TPC-1551WP-WMKE** Wall mount kit for TPC-1551WP
- **1702002600** Power Cable US Plug 1.8 M
- **1702002605** Power Cable EU Plug 1.8 M
- **1702031801** Power Cable UK Plug 1.8 M
- **1700000596-11** Power Cable China/Australia Plug 1.8 M

## Embedded OS

- **2070013484** TPC-xx51WP WS7P x64 MUI V4.13
- **2070014387** TPC-xx51WP WS7P X86 MUI. V4.14
- **2070014871** TPC-xx51WP Win10 Enterprise LTSB x64 MUI image V6.01
- **2070013911** TPC-1551WP WEC7 X64 MUI V4.00

## iDoor Modules (TPC-1251T-EHKE is required for iDoor modules)

- **PCM-26D2CA-AE** SJA1000 CANBus, CANOpen, DB9 x 2
- **PCM-26D1DB-MAE** Hilscher netX100 FieldBus, ProfiBus, DB9 x 1
- **PCM-27D24DI-AE** Digital I/O, 16 DI / 8 DO, Isolation, DB37 x 1
- **PCM-24D2R4-AE** OXPCIe-952 UART, Isolated RS-422/485, DB9 x 2
- **PCM-24D2R2-AE** OXPCIe-952 UART, Isolated RS-232, DB9 x 2
- **PCM-24R2GL-AE** 2 Port Giga LAN Intel i350 PCIe mini card
- **PCM-24R1TP-AE** Intel 82574L, GbE, IEEE 1588 PTP, RJ45 x 1
- **PCM-24S2WF-BE** 802.11 a/b/g/n/ac 2T2R w/BT4.1, Atheros QCA6174A

## Application Software

| | |
|---|---|
| **WebAccess/SCADA** | Advantech WebAccess/SCADA is a 100% browser-based IIoT software platform aimed at supervisory control and data acquisition (SCADA) operations. WebAccess/SCADA provides open interfaces that allow our customers and partners to develop unique IoT applications for different vertical markets. In addition to supporting traditional SCADA functions, the platform features an HTML5-based user interface and intelligent dashboard to facilitate cross-platform, cross-browser data analysis. Moreover, WebAccess/SCADA not only offers built-in widgets, but is also equipped with an innovative Widget Builder that enables customers to build their own widgets. |
| **WebAccess/HMI** | Advantech WebAccess/HMI is human-machine interface (HMI) software based on Microsoft's Windows operating system. This software features excellent communication and monitoring capabilities, supports more than 350 PLC communication protocols, and offers a wide choice of screen design objects to satisfy diverse integrations of factory automation and HMI operation and monitoring requirements. |

Please note: If some optional modules are offered with the system, additional system certificates may be required in certain regions/countries.
Please contact Advantech for certificate compliance.