# TPC-1551T

## 15" XGA TFT LED LCD Thin-Client Terminal with Intel® Atom™ Processor

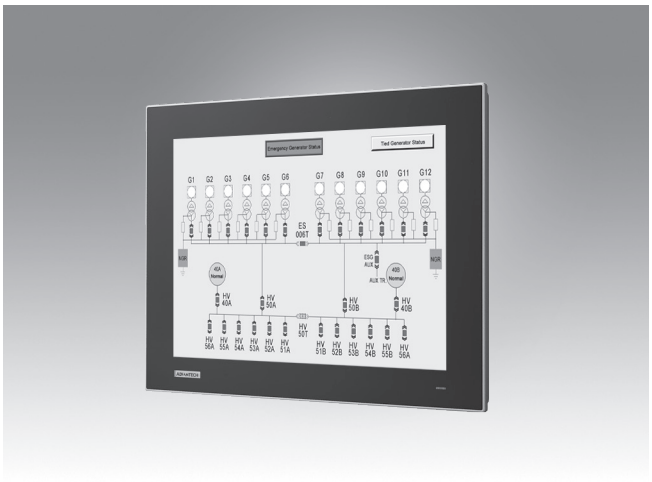

## Features

- Industrial-grade 15" XGA TFT LCD with 50K lifetime and LED backlight
- Intel® Atom™ E3827 1.75 GHz dual-core processor with 4 GB DDR3L SDRAM
- Wide operating temperature range -20 ~ 60 °C (-4 ~ 140 °F)
- True-flat touchscreen with IP66-rated front panel/non-flat touchscreen with IP65-rated front panel
- Front-facing LED indicators to show operating status
- Durable touchscreen with 5-wire resistive touch control
- Supports Advantech's iDoor technology for integrating optional accessories
- Compact, fanless embedded system with aluminum alloy front bezel and chassis grounding protection
- Supports Advantech's SNMP Subagent software
- Supports Advantech's WISE-PaaS/RMM remote management software

## Introduction

The TPC-1551T thin-client terminal is equipped with a 15" XGA TFT LCD, low-power Intel® Atom™ E3827 1.75 GHz dual-core processor, and 4 GB DDR3L SDRAM to deliver high-performance computing in a compact, fanless system. For enhanced durability, TPC-1551T features a true-flat touchscreen with IP66-rated front panel, die cast aluminum alloy front bezel, and 5-wire resistive touch control. In addition to supporting a wide operating temperature range (-20 ~ 60 °C/-4 ~ 140 °F), TPC-1551T includes a full-size mini PCIe slot for extending the system functionalities to satisfy diverse automation application needs. Moreover, Advantech's iDoor technology can be integrated via the mini PCIe slot in order to provide additional I/O connectors, isolated digital I/O, fieldbus protocols, 3G/GPS/GPRS/Wi-Fi communication, and MRAM.

## Specifications

### General

- **BIOS** AMI UEFI
- **Certification** BSMI, CCC, CE, FCC Class A, UL
- **Cooling System** Fanless design
- **Dimensions (W x H x D)** 383.20 x 307.30 x 61.10 mm (15.09 x 12.10 x 2.41 in)
- **Enclosure** Front bezel: Die cast aluminum alloy<br>Back housing: SECC
- **Mounting** Desktop, Wall or Panel Mount
- **OS Support** Microsoft® WES7 (32/64-bit), Windows 7 (32/64-bit), Windows 10 Enterprise LTSB
- **Power Consumption** 40.8 W (typical)
- **Power Input** 24 $V_{DC}$ +/- 20%
- **Watchdog Timer** 1 ~ 255 sec (system)
- **Weight (Net)** 3.9 kg (8.59 lb)

### System Hardware

- **CPU** Intel® Atom™ E3827 1.75 GHz dual-core processor
- **Memory** 1 x SODIMM with 4 GB DDR3L SDRAM (supports up to 8 GB)
- **LAN** 10/100/1000BASE-T x 2
- **Expansion Slots** Full-size mini PCIe
- **Storage** 1 x CFast<br>1 x 2.5" SATA SSD (optional)
- **I/O** 1 x RS-232<br>1 x RS-232/422/485<br>1 x USB 3.0<br>1 x USB 2.0

### LCD Display

- **Display Type** XGA TFT LED LCD
- **Display Size** 15"
- **Max. Resolution** 1024 x 768
- **Max. Colors** 16.7M
- **Luminance cd/m²** 400
- **Viewing Angle (H/V°)** 160/140
- **Backlight Life** 50,000 hr
- **Contrast Ratio** 700:1

### Touchscreen

- **Lifespan** 36 million touches at a single point
- **Light Transmission** Above 75%
- **Resolution** Linearity
- **Type** 5-wire analog resistive

### Environment

- **Humidity** 10 ~ 95% RH @ 40°C, non-condensing
- **Ingress Protection** Front panel: IP66
- **Operating Temperature** -20 ~ 60 °C (-4 ~ 140 °F)
- **Storage Temperature** -30 ~ 70 °C (-22 ~ 158 °F)
- **Vibration Protection** With CFast: 2 Grms (5~500 Hz)<br>With HDD: 1 Grms (5 ~ 500 Hz)<br>(Operating, random vibration)

## Rear View

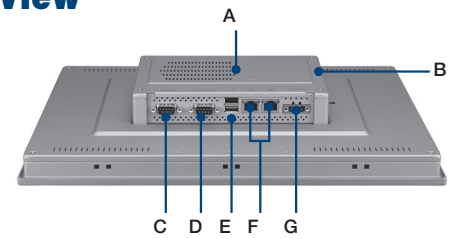


A. External HDD/SSD/iDoor kit (TPC-1251T-EHKE) (Optional)
B. CFast
C. RS-232
D. RS-232/422/485
E. USB 3.0 & 2.0
F. LAN (10/100/1000)
G. Power Receptor



All product specifications are subject to change without notice.

## Dimensions

Unit: mm

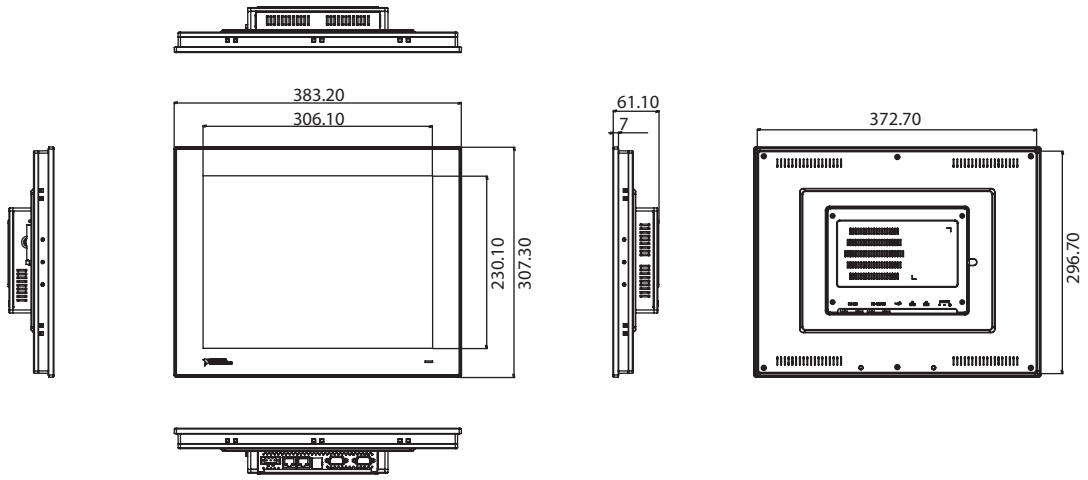


**TPC-1551T Panel Cutout Dimensions: 374.5 x 298.5 mm (14.74 x 11.75 in)**

## Ordering Information

- **TPC-1551T-E3AE** 15" XGA Panel PC, Intel® Atom™ E3827 1.75 GHz Dual-core Processor, 4GB (True-flat touchscreen)
- **TPC-1551H-E3AE** 15" XGA Panel PC, Intel® Atom™ E3827 1.75 GHz Dual-core Processor, 4GB (Non-flat touchscreen IP65 certified traditional TPC front panel)

## Optional Accessories

- **PWR-247-CE** 60W DC 24V/2.5A Output Power Supply
- **TPC-1251T-EHKE** HDD/SSD and iDoor extension kit
- **1702002600** Power Cable US Plug 1.8 M
- **1702002605** Power Cable EU Plug 1.8 M
- **1702031801** Power Cable UK Plug 1.8 M
- **1700000596-11** Power Cable China/Australia Plug 1.8 M
- **TPC-1000H-WMKE** TPC VESA Mounting Kit from 10" to 17" TPC
- **TPC-1000H-SMKE** TPC Stand kit from 10" to 17" TPC

## Embedded OS

- **20703WE7PS0004** TPC-xx51T/H WS7P x64 MUI Image V4.18
- **20703WE7PS0005** TPC-xx51T/H WS7P x86 MUI Image V4.18
- **2070015041** TPC-xx51T-(6)xxAE Win10 2016LTSB V6.01 image
- **2070014677** TPC-1251T/H WEC7 x64 MUI Image V4.01

## S/W Bundle Offering

- **WA-HT1551T-E15H1AE** TPC-1551T-E3AE, HMI Runtime 1500 tags, 32G CFast, WES7P
- **WA-ST1551T-E15H4AE** TPC-1551T-E3AE, SCADA Runtime 1500 tags, 1TB HDD, WES7P

## iDoor Modules (TPC-1251T-EHKE is required for iDoor modules)

- **PCM-26D2CA-AE** SJA1000 CANBus, CANOpen, DB9 x 2
- **PCM-26D1DB-MAE** Hilscher netX100 FieldBus, ProfiBus, DB9 x 1
- **PCM-27D24DI-AE** Digital I/O, 16 DI / 8 DO, Isolation, DB37 x 1
- **PCM-24D2R4-AE** OXPCIe-952 UART, Isolated RS-422/485, DB9 x 2
- **PCM-24D2R2-AE** OXPCIe-952 UART, Isolated RS-232, DB9 x 2
- **PCM-24R2GL-AE** 2 Port Giga LAN Intel i350 PCIe mini card
- **PCM-24R1TP-AE** Intel 82574L, GbE, IEEE 1588 PTP, RJ45 x 1
- **PCM-24S2WF-BE** 802.11 a/b/g/n/ac 2T2R w/BT4.1, Atheros QCA6174A

## Application Software

| | |
|---|---|
| **WebAccess/SCADA** | Advantech WebAccess/SCADA is a 100% browser-based IIoT software platform aimed at supervisory control and data acquisition (SCADA) operations. WebAccess/SCADA provides open interfaces that allow our customers and partners to develop unique IoT applications for different vertical markets. In addition to supporting traditional SCADA functions, the platform features an HTML5-based user interface and intelligent dashboard to facilitate cross-platform, cross-browser data analysis. Moreover, WebAccess/SCADA not only offers built-in widgets, but is also equipped with an innovative Widget Builder that enables customers to build their own widgets. |
| **WebAccess/HMI** | Advantech WebAccess/HMI is human-machine interface (HMI) software based on Microsoft's Windows operating system. This software features excellent communication and monitoring capabilities, supports more than 350 PLC communication protocols, and offers a wide choice of screen design objects to satisfy diverse integrations of factory automation and HMI operation and monitoring requirements. |

Please note: If some optional modules are offered with the system, additional system certificates may be required in certain regions/countries.
Please contact Advantech for certificate compliance.