TPC-1582H

15" XGA TFT LED LCD Touch Panel Computer with 4th Gen. Intel® Core™ i3 Processor

Features

- Industrial-grade 15" SXGA TFT LCD with 50K lifetime and LED backlight
- 4th Gen Intel® Core™ i3-4010U/i7-4650U with 4 GB DDR3L SDRAM
- Compact, fanless embedded system with aluminum alloy front bezel
- IP65-rated front panel and panel mount
- Durable touchscreen with 5-wire resistive touch control
- Supports expansion via PCIe 1x and mini PCIe
- Diverse system I/O and isolated digital I/O via iDoor technology
- Supports fieldbus protocols via iDoor technology
- 3G/GPS/GPRS/Wi-Fi capabilities via iDoor technology
- Supports MRAM via iDoor technology
- Chassis grounding protection
- Supports HDMI and multimedia audio
- Supports Advantech's WISE-PaaS/RMM remote management software

Introduction

The TPC-1582H touch panel computer is equipped with a 15" XGA TFT LCD, low-power 4th Gen Intel® Core™ i3 1.7 GHz processor, and 4 GB DDR3L SDRAM to deliver high-performance computing in a compact, fanless system. To enhance the system's durability, TPC-1582H features an IP65-rated front panel that protects against dust and water ingress, a die-cast aluminum alloy front bezel, and 5-wire resistive touch control. TPC-1582H also includes PCIe and mini PCIe slots to extend the system functionalities and satisfy diverse automation application needs. Moreover, Advantech's iDoor technology can be integrated via the mini PCIe slot in order to provide additional I/O connectors, isolated digital I/O, fieldbus protocols, 3G/GPS/GPRS/Wi-Fi communication, and MRAM. The integrated HDMI and audio ports allow a secondary monitor and speakers to be attached for increased functionality.

Specifications

General

- **BIOS** AMI UEFI
- **Certification** BSMI, CCC, CE, FCC Class A, UL
- **Cooling System** Fanless design
- **Dimensions (W x H x D)** 383 x 307 x 78.5 mm (15.08 x 12.09 x 3.09 in)
- **Enclosure** Front bezel: Die cast aluminum alloy
Back housing: PC/ABS resin
- **Mount Options** Desktop, Wall or Panel Mount
- **OS Support** Microsoft® Windows WES7 (32/64-bit), WES8 (64-bit), Windows 7 (32/64-bit), Windows 8 (64-bit), Linux Kernel 3.x, Windows 10 IoT Enterprise LTSB
- **Power Consumption** 18W typical, 60W max. (without add-on card)
- **Power Input** $24V_{DC} \pm 20\%$
- **Watchdog Timer** 1 ~ 255 sec (system)
- **Weight (Net)** 5.5 kg (12.13 lbs)

System Hardware

- **CPU** 4th Generation Intel Core i3-4010U 1.7 GHz
- **Chipset** Lynx Point-LP
- **Memory** 4 GB DDR3L 1600 MHz SODIMM SDRAM
- **LAN** 2 x 10/100/1000BASE-T (1 x supports iAMT)
- **Expansion Slots** 1 x half-size PCIe, 1 x full-size mini PCIe
- **Storage** 1 x CFast
1 x 2.5" SATA SSD
1 x mSATA (via mini PCIe)
- **I/O** 1 x RS-232, 1 x RS-232/422/485
2 x USB 3.0, 1 x HDMI 1.4
1 x Audio line out, 1 x USB 2.0 (optional)
1 x Audio mic in (optional)

LCD Display

- **Display Type** XGA TFT LED LCD
- **Display Size** 15"
- **Max. Resolution** 1024 x 768
- **Max. Colors** 16.2M
- **Luminance cd/m²** 400
- **Viewing Angle (H/V°)** 160/140
- **Backlight Life** 50,000 hr
- **Contrast Ratio** 700:1

Touchscreen

- **Lifespan** 36 million touches at single point
- **Light Transmission** Above 75%
- **Resolution** Linearity
- **Type** 5-wire analog resistive

Environment

- **Humidity** 10 ~ 95% RH @ 40 °C, non-condensing
- **Ingress Protection** Front panel: IP65
- **Operating Temperature** 0 ~ 55 °C (32 ~ 131 °F)
- **Storage Temperature** -20 ~ 60 °C (-4 ~ 140 °F)
- **Vibration Protection** With HDD: 1 Grms (5 ~ 500 Hz) (Operating, random vibration)

研伟科技 15923776600

Rear View

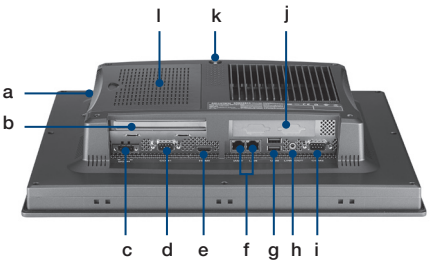

a. CFast
b. PCIe slot
c. $24V_{DC}$ Power
d. COM (RS-232)
e. HDMI
f. LAN
g. USB3.0
h. Audio line out
i. COM (RS-232/422/485)
j. iDoor
k. SMA connector for antenna
l. 2.5" SATA SSD and mini PCIe slots

All product specifications are subject to change without notice.
Last updated: 5-Jan-2021

Dimensions

Unit: mm

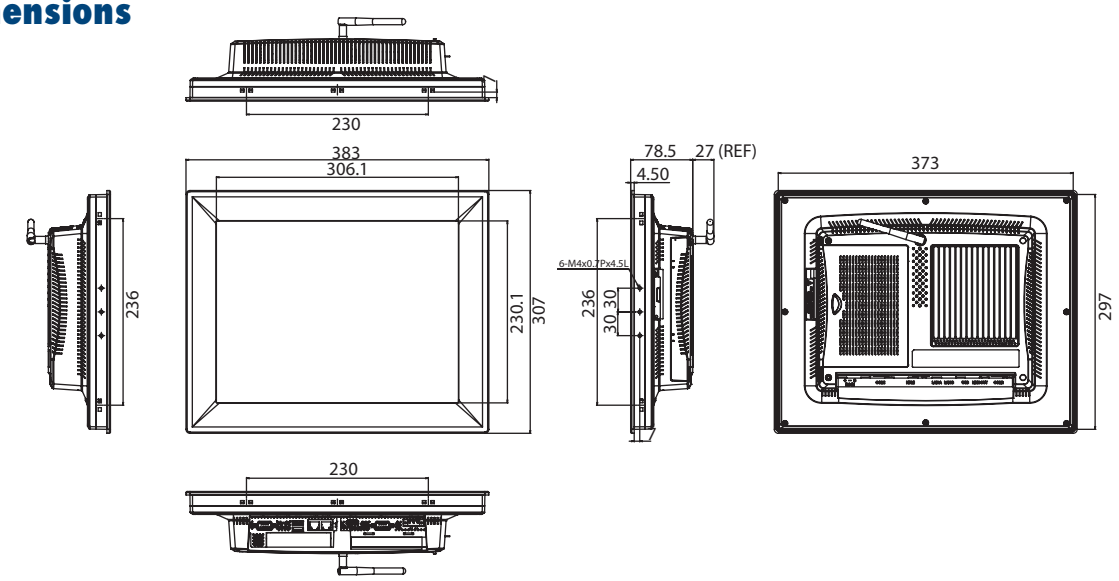

Panel Cutout Dimensions: 374.5 x 298.5 mm (14.74 x 11.75 in)

Ordering Information

- **TPC-1582H-433BE** 15" XGA Panel PC, Intel i3-4010U, 4GB, iDoor, PCIe

Optional Accessories

- **96PSA-A150W24T2** Adapter 100-240V 150W 24V
- **1702002600** Power Cable US Plug 1.8 M
- **1702002605** Power Cable EU Plug 1.8 M
- **1702031801** Power Cable UK Plug 1.8 M
- **1700000596-11** Power Cable China/Australia Plug 1.8 M
- **TPC-1000H-WMKE** TPC VESA Mounting Kit from 10" to 17" TPC
- **TPC-1000H-SMKE** TPC Stand kit from 10" to 17" TPC
- **EWM-W151H01E** 802.11bgn RTL8188EE 1T1R, Half-size Mini-PCIe (also need 9656EWMG00E)
- **9656EWMG00E** Half-size miniPCIe to Full-size miniPCIe bracket set
- **1750000318** EMI Antenna 2DBI 2.4GHz SMA CONN for ARK-3384
- **1750003222** 802.11b/g 5dBi Dipole Antenna
- **1750003418** Wireless Antenna AN2400-5901RS R/P SMA.M9dB

Embedded OS

- **2070013102** TPC-xx82 WS7P x64 MUI Image v4.12 B005
- **2070013700** TPC-xx82 WS7P x86 MUI Image v4.12

iDoor Modules

- **PCM-24D2R4-AE** 2-Port Isolated RS-422/485 mPCIe, DB9
- **PCM-27D24DI-AE** 24-Channel Isolated Digital I/O w/ counter mPCIe, DB37
- **PCM-26D2CA-AE** 2-Port Isolated CANBus mPCIe, CANOpen, DB9
- **PCM-24R1TP-AE** 1-Port Gigabit Ethernet, Intel® 82574L, mPCIe, RJ45
- **PCM-24S2WF-AE** WiFi 802.11 a/b/g/n 2T2R w/ Bluetooth4.0, Half-size mPCIe, 2-port SMA
- **PCM-26R2PN-MAE** 2-Port Hilscher netX100 FieldBus mPCIe, PROFINET, RJ45, Master
- **PCM-26R2EC-MAE** 2-Port Hilscher netX100 FieldBus mPCIe, EtherCAT, RJ45, Master
- **PCM-26R2EI-MAE** 2-Port Hilscher netX100 FieldBus mPCIe, EtherNet/IP, RJ45, Master
- **PCM-26R2S3-MAE** 2-Port Hilscher netX100 FieldBus mPCIe, Sercos III, RJ45, Master

Application Software

WebAccess/SCADA	Advantech WebAccess/SCADA is a 100% browser-based IIoT software platform aimed at supervisory control and data acquisition (SCADA) operations. WebAccess/SCADA provides open interfaces that allow our customers and partners to develop unique IoT applications for different vertical markets. In addition to supporting traditional SCADA functions, the platform features an HTML5-based user interface and intelligent dashboard to facilitate cross-platform, cross-browser data analysis. Moreover, WebAccess/SCADA not only offers built-in widgets, but is also equipped with an innovative Widget Builder that enables customers to build their own widgets.
WebAccess/HMI	Advantech WebAccess/HMI is human-machine interface (HMI) software based on Microsoft's Windows operating system. This software features excellent communication and monitoring capabilities, supports more than 350 PLC communication protocols, and offers a wide choice of screen design objects to satisfy diverse integrations of factory automation and HMI operation and monitoring requirements.
CODESYS	The CODESYS application-ready-package offering includes a PC-based panel controller with multi-touch control, high-performance Intel Core i multi-core processor, SSD, 2 MB MRAM, Microsoft Windows Embedded 7 Pro OS, and CODESYS Control Runtime & Visualization software. This package allows users to easily develop a PC-based real-time control system, enables real-time PLC or PLC/SoftMotion control with flexible fieldbus options such as PROFINET, EtherCAT, EtherNet/IP, CANopen, and Modbus TCP/RTU, and facilitates on-site visualized HMI operation. The software/hardware flexibility and the stability of a PC-based cabinet controller are suitable for various control applications in vertical industries.

Please note: If some optional modules are offered with the system, additional system certificates may be required in certain regions/countries.
Please contact Advantech for certificate compliance.