TPC-315

15" XGA TFT LED LCD Touch Panel Computer with 8th Gen. Intel® Core™ i3/ i7 Processor, built-in 8G DDR4 RAM

Features

- Industrial-grade 15" XGA TFT LCD with 70K lifetime and LED backlight
- 8th Gen. Intel® Core™ i3- 8145UE dual-core/ i7-8665UE quad-core processor with built-in 8 GB DDR4 SO-DIMM
- Dual channel memory slots support up to 64G in total
- Compact, fanless embedded system with aluminum alloy front bezel and chassis grounding protection
- True-flat touchscreen with 5-wire resistive touch control and IP66-rated front panel
- Support expansion via Full-size Mini PCIe and two M.2 slots (NVMe, 5G)
- Diverse system I/O and isolated digital I/O via iDoor technology
- Support fieldbus protocols/GPS/GPRS/Wi-Fi capabilities via iDoor technology
- Support TPM2.0 hardware security

Introduction

TPC-315 touch panel computer is equipped with 15" XGA TFT LED LCD, low-power 8th Gen. Intel® Core™ i3- 8145UE dual-core/ i7-8665UE quad-core processor, and 8 GB DDR4 SO-DIMM delivering high performance yet compact and fanless computing system. To provide enhanced durability and satisfy diverse applications of industrial automation, TPC-315 features IP66-rated front panel protecting against dust and water ingress, and two extra expansion M.2 M Key, B Key slots supporting NVMe, SATA or 5G application. With Advantech's iDoor technology integrated via mini PCIe slot for function expansions such as additional I/O ports, isolated digital I/O, fieldbus protocols, GPS/GPRS/Wi-Fi communication and MRAM. The integrated DP and audio ports allow a secondary monitor and speakers to be attached for increased functionality.

Specifications

General

- **BIOS** AMI UEFI
- **Certification** BSMI, CCC, CE, FCC Class A, CB/UL
- **Cooling System** Fanless design
- **Dimensions (W x H x D)** 383.2 x 307.3 x 66.5 mm (15.09 x 12.10 x 2.62 in)
- **Enclosure** Front bezel: Die cast aluminum alloy
  Back housing: Die cast aluminum alloy
- **Mounting** VESA Mount, Desktop, Wall or Panel Mount
- **OS Support** Win 10, Android, Linux
- **Power Consumption** 36.79W (Typical)
- **Power Input** 24 V_{DC} ± 20%
- **Watchdog Timer** 15-255 sec (system)
- **Weight (Net)** 5.8kg (12.79lbs)

System Hardware

- **CPU** 8th Gen. Intel® Core™ i3- 8145UE 2.20 GHz Dual-core/ i5-8365UE 1.60 GHz Quad-core/ i7-8665UE 1.70 GHz Quad-core processor
- **Memory** Dual channel DDR4 SO-DIMM (Each channel supports up to 32G)
  1 x 8G DDR4 SO-DIMM (Built-in)
- **LAN** 2 x 10/100/1000BASE-T
- **Expansion Slot** 1 x Full-size mini PCIe
  1 x SIM (M.2 B Key 4G/5G module)
- **Storage Slot** 1 x M.2 M key 2280 (SATA or NVMe PCIe x4)
  1 x M.2 B key 2242 (SATA / PCIe)
  3042, 3052 (5G)
  1 x 2.5" SSD/ HDD (SATA, Max. 7mm)
- **I/O** 2 x RS-232/422/485
  1 x USB 2.0
  4 x USB 3.2 (Gen 2)
  1 x iDoor slot
  1 x Displayport (Video output)
  1 x Audio line out/ mic in

LCD Display

- **Display Type** XGA TFT LED LCD
- **Display Size** 15'' (4:3)
- **Max. Resoltuion** 1024x768
- **Max Colour** 16.2M
- **Luminance cd/m²** 300
- **Viewing Angle (H/V°)** 176°/176°
- **Backlight Life** 70,000hrs
- **Contrast Ratio** 2000:1

Touchscreen

- **Lifespan** 36 million touches at a single point
- **Light Transmission** Above 75%
- **Resolution** Linearity
- **Type** 5-wire analog resistive

Environment

- **Humidity** 10 ~ 95% RH @ 40°C, non-condensing
- **Ingress Protection** IP66-rated front panel
- **Operating Temperature** -10~55°C (14~131°F) (w/o air flow)
- **Storage Temperature** -20~70°C (-4~158°F)
- **Vibration Protection** With SSD: 1 Grms (5 ~ 500 Hz)
  (Operating, random vibration)

Rear View

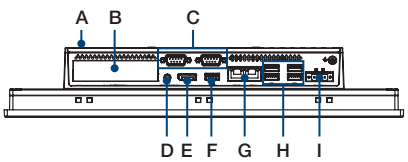

A. Default HDD/SSD Bay
B. iDoor slot
C. RS-232/422/485
D. Audio line out/ mic in
E. Display Port
F. USB 2.0
G. LAN (10/100/1000)
H. USB 3.2 (Gen 2)
I. Power Receptor

All product specifications are subject to change without notice.

Dimensions

Unit: mm

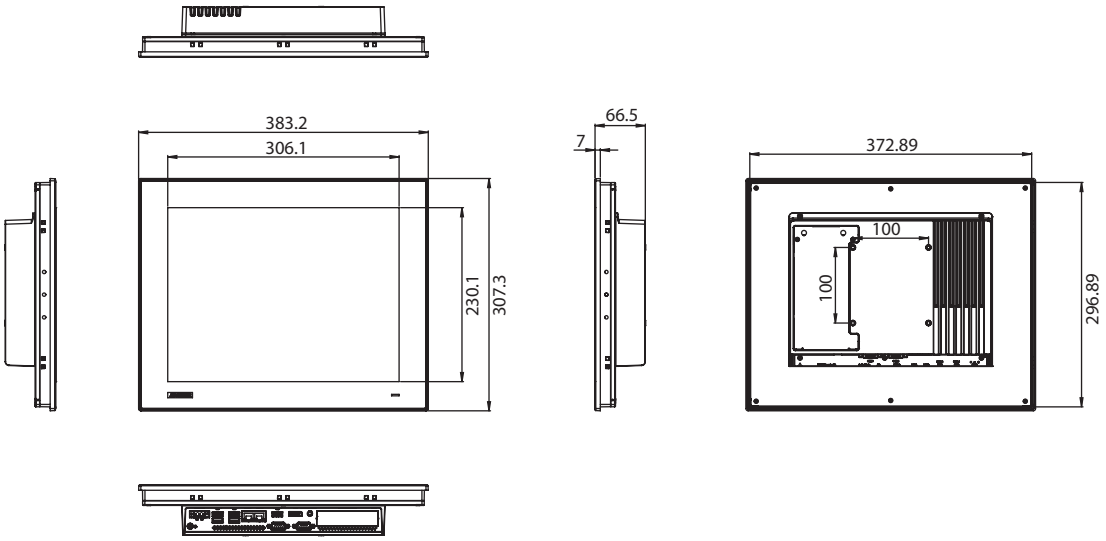

TPC-315 Panel Cutout Dimensions: 374.5 x 298.5 mm (14.74 x 11.75 in)

Ordering Information

- **TPC-315-R833A** 15" XGA Panel PC, Intel® Core™ i3-8145UE 2.20GHz Dual-core Processor, 8G DDR4 RAM
- **TPC-315-R853A** 15" XGA Panel PC, Intel® Core™ i5-8365UE 1.60GHz Quad-core Processor, 8G DDR4 RAM
- **TPC-315-R873A** 15" XGA Panel PC, Intel® Core™ i7-8665UE 1.70 GHz Quad-core Processor, 8G DDR4 RAM
- **TPC-315-R833AO** 15" XGA Panel PC, Intel® Core™ i3-8145UE 2.20GHz Dual-core Processor, 8G DDR4 RAM, without Audio Function
- **TPC-315-R853AO** 15" XGA Panel PC, Intel® Core™ i5-8365UE 1.60GHz Quad-core Processor, 8G DDR4 RAM, without Audio Function

Optional Accessories

- **96PSA-A120W24T2-3** 120W 24V_{DC} power supply
- **1702002600** Power cable (US) 1.8 M
- **1702002605** Power cable (EU) 1.8 M
- **1702031801** Power cable (UK) 1.8 M
- **1700000596-11** Power cable (China/Australia) 1.8 M

Embedded OS

- **20703WX9VS0035** Img WIN10LTSC v6.06 B014 TPC-300/TPC-B510 Value
- **20703WX9HS0031** Img WIN10LTSC v6.06 B014 TPC-300/TPC-B510 High
- **20703LEB1S0091** Image AdvLinuxTu V2.0.6 for UNO/TPC series
- **Coming Soon** Android

iDoor Modules

- **PCM-24D2R4-BE** Isolated RS-422/485, DB9 x 2, (USB type)
- **PCM-24D2R2-BE** Isolated RS-232, DB9 x 2, (USB type)
- **PCM-24R1TP-AE** 1-Port Gigabit Ethernet, Intel® 82574L, mPCIe, RJ45
- **PCM-27D24DI-AE** Digital I/O, 16 DI / 8 DO, Isolation, DB37 x 1
- **PCM-24S2WF-BE** 802.11 a/b/g/n/ac 2T2R w/BT4.1, Atheros QCA6174A
- **PCM-26D2CA-AE** 2-Port Isolated CANBus mPCIe, CANOpen, DB9
- **PCM-23U1DG-CE** Internal locked USB Slot for USB Dongle, mPCIe
- **PCM-24R2GL-AE** 2 Port Giga LAN Intel i350 PCIe mini card
- **PCM-24S34G-ABE** TOBY-L200 LTE/HSPA+/GPRS, mPCIe, Ant, America (US)
- **PCM-24S34G-EBE** TOBY-L210 LTE/HSPA+/GPRS, mPCIe, Ant, EMEA/APAC (AU.EU)

Application Software

WebAccess/SCADA	Advantech WebAccess/SCADA is a 100% browser-based IIoT software platform aimed at supervisory control and data acquisition (SCADA) operations. WebAccess/SCADA provides open interfaces that allow our customers and partners to develop unique IoT applications for different vertical markets. In addition to supporting traditional SCADA functions, the platform features an HTML5-based user interface and intelligent dashboard to facilitate cross-platform, cross-browser data analysis. Moreover, WebAccess/SCADA not only offers built-in widgets, but is also equipped with an innovative Widget Builder that enables customers to build their own widgets.
WebAccess/HMI	Advantech WebAccess/HMI is human-machine interface (HMI) software based on Microsoft's Windows operating system. This software features excellent communication and monitoring capabilities, supports more than 350 PLC communication protocols, and offers a wide choice of screen design objects to satisfy diverse integrations of factory automation and HMI operation and monitoring requirements.

Please note: If some optional modules are offered with the system, additional system certificates may be required in certain regions/countries.
Please contact Advantech for certificate compliance.