WISE-4210

Industrial Proprietary LPWAN (SUB-G) Wireless I/O Module

Features

- Proprietary LPWAN with using sub-1GHz wireless frequency
- Battery power for 5 years with 3 x 3.6V AA batteries
- Up to 5 km communication range in open space
- Longer communication range than 2.4GHz
- Better penetration through concrete and steel than 2.4GHz
- Less interference than 2.4GHz spectrum
- Application-ready I/O combination with modularization design

Introduction

LPWAN, created for machine-to-machine (M2M) and Internet of things (IoT) networks, is not a single technology, but a variety of low-power, wide area network technologies. Compare with traditional mobile network, LPWAN is known as lower cost with higher power efficiency. WISE-4210 series is the proprietary LPWAN which provides better connection compare with traditional 2.4G WiFi, WISE-4210 series is helpful of eliminating network interference.

Additionally, WISE-4210 utilize a LPWAN(low-power, wide-area networks) wireless interface, which has a kilometer-long communication distance and battery power. The features of LPWAN make WISE modules ideal solutions for energy and environment monitoring.

Reduced Interference and Extended Communication Range

Compared with Wi-Fi, Bluetooth, Zigbee, or other 2.4GHz wireless interfae, a sub-GHz interface can reduce interference at sites. Moreover, Sub-GHz is a type of LPWAN designed for long-range communications. Under the same power consumption, sub-GHz offers a longer communication range with low data rate than other 2.4 GHz. technologies.

Powered by a 3.6V AA Lithium Battery

The low power consumption of sub-GHz enables the sensor node to be powered by a battery. With a 3.6V AA Lithium battery, the sensor node can maintain communication at a distance of 5 km for up to 5 years, thereby eliminating the need to recharge or change batteries.

Star Topology

Star topology, also known as star network, is the most common network setup. In star topology, every node connects to a central network device which means WISE-4210-S200 series nodes acts as clients should be connected with WISE-4210-AP. In this configuration, user can organize their own network with 64 nodes paired. Data on a star network pass through WISE-4210-AP before continuing to its destination. WISE-4210-AP with a LAN cable manages and controls most of all functions of the network.

MQTT and RESTful API IoT Protocol Support

IoT Wireless sensor nodes are designed for not only automation applications but also IoT applications that may use MQTT or RESTful web API IoT protocols for cloud integrations.

Azure IoT Hub Support

To provide a complete IoT sensing solution, the WISE-4210 series goes beyond being a wireless communication interface for sensors—it also provides cloud connectivity for additional user applications. With support for HTTPS and integrated APIs for Azure IoT Hub, the WISE-4210 series can automatically push data to the cloud without requiring an IoT gateway.

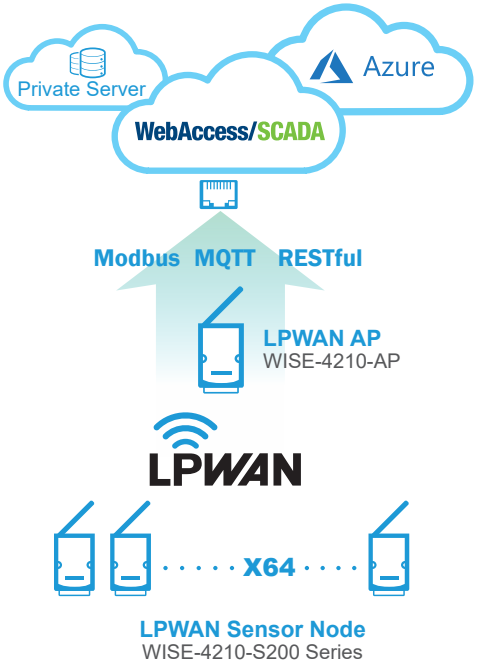

All product specifications are subject to change without notice.

Last updated: 19-Aug-2019

Common Specification

WISE-4210

- **Frequency Band** NA915: 923MHz (920.60~924.60), BW: 400kHz
  EU868: 868MHz (865.00~869.00), BW: 400kHz
  UN433: 433MHz (433.05~434.55), BW: 300kHz
- **Antenna Gain** 902~928MHz:1.33 dBi
  863~870MHz:2.19 dBi
- **Data Rate** 625bps, 50kbps
- **Outdoor Range** 625bps: 5 km with line of sight
  50kbps: 2 km with line of sight
- **Topology** Star
- **Network Capacity** 64 clients

General

- **Power Input** AP: 10 ~ 50 V_{DC}
  Sensor Node: 3 x AA, 3.6V Lithium Battery or 10 ~ 50 V_{DC}
- **Battery Life** 625bps: 5 years with 10 minute update rate @ 25°C
  50kbps: 5 years with 1 minute update rate @ 25°C
- **Configuration Interface** AP: LAN port
  Sensor Node: Micro-B USB
- **LED Indicator** Status, Error, Tx, Rx, Battery/Signal Level
- **Mounting** DIN 35 rail, wall, pole and stack
- **Dimension (W x H x D)** 70 x 102 x 38 mm
- **Certification** CE, FCC, IC, NCC, TELEC

Environment

- **Operating Temperature** -25 ~ 70°C
- **Operating Humidity** 5 ~ 95% RH
- **Storage Temperature** -40 ~ 85°C
- **Storage Humidity** 0 ~ 95% RH

WISE-4210-AP (Access Point)

- **Data Rate** 625 bps, 2.5k bps, 5k bps, 50k bps,
- **Ethernet** RJ-45 (for configuration and data query)
- **RS-485** Data+, Data- (for query node data)
- **Messaging Protocol** Modbus/TCP, Modbus/RTU, REST, MQTT
- **Application Protocol** HTTP, HTTPS, SNTP, DHCP
- **Transport Protocol** TCP, UDP
- **Supports RESTful Web API in JSON format**
- **Supports Web Server in HTML5**

WISE-4210-S231 (Built-in Temperature & Humidity Sensor)

Temperature Sensor

- **Operating Range** -25°C ~ 70°C (-13°F ~ 157.9°F)
- **Resolution** 0.1 (°C/°F/K)
- **Accuracy** ±1.0°C (±1.8°F) (vertical installation)

Humidity Sensor

- **Operating Range** 10 ~ 90% RH
- **Resolution** 0.1% RH
- **Accuracy** ±4% RH @ for 0%~50% RH
  ±6% RH @ 50%~60% RH
  ±10% RH @ 60%~90% RH

WISE-S214 (4AI/4DI)

Analog Input

- **Channels** 4
- **Resolution** 16bits Bipolar
  15bits Unipolar
- **Sampling Rate** 1Hz (per Channel) with 50/60Hz Rejection
  (Power Saving Mode)
  10Hz (Total) with50/60Hz Rejection (Normal Mode)
- **Accuracy** ±0.1% for Voltage Input
  ±0.2% for Current Input
- **Input Range** 0~150mV, 0~500mV, 0~1V, 0~5V, 0~10V, ±150mV, ±500mV, ±1V, ±5V, ±10V, 0~20mA, ±20mA, 4-20mA
- **Input Impedance** >1MΩ (Voltage)
- **Isolated voltage** 3kVrms
- **Support Data Scaling and Averaging**

Digital Input

- **Channels** 4 (Dry Contact)
- **Supports 32-bit counter input function (maximum signal frequency 200Hz)**
- **Supports keep/discard counter value on power-off**
- **Support inverted digital input status**

WISE-S250 (6DI, 2DO& 1RS-485)

Digital Input

- **Channels** 6 (Dry Contact)
- **Supports** 3kHz Frequency Input

Digital Output (Sink Type)

- **Channels** 2
- **Output Current** 100 mA
  At 0 -> 1: 100 us
  At 1 -> 0: 100 us
  (for Resistive Load)
- **Supports Pules Output** 5 kHz
- **Max. Load Voltage** 30V

Serial Port

- **Port Number** 1
- **Type** RS-485
- **Data Bits** 7, 8
- **Stop Bits** 1, 2
- **Parity** None, Odd, Even
- **Baud Rate (bps)** 1200, 2400, 4800, 9600, 19200, 38400, 57600, 115200
- **Protocol** Modbus/RTU (Total 64 addresses by 30 max. instructions)

WISE-S251 (6DI/1RS-485)

Digital Input

- **Channels** 6 (Dry Contact)
- **Supports 32-bit counter input function (maximum signal frequency 200Hz)**
- **Supports keep/discard counter value on power-off**
- **Support inverted digital input status**

研伟科技 13776600

Serial Port

- **Port Number** 1
- **Type** RS-485
- **Data Bits** 7, 8
- **Stop Bits** 1, 2
- **Parity** None, Odd, Even
- **Baud Rate (bps)** 1200, 2400, 4800, 9600, 19200, 38400, 57600, 115200
- **Protocol** Modbus/RTU (Total 32 address by max. 8 instructions)

Ordering Information

WISE-4210 Access Point

- **WISE-4210-APNA** LPWAN Wireless to Ethernet AP – NA915/EU868
- **WISE-4210-APUA** LPWAN Wireless to Ethernet AP – UN433

WISE-4210 Node

- **WISE-4210-NA** Proprietary LPWAN SUB-G Wireless I/O Module – NA915/EU868
- **WISE-4210-UA** Proprietary LPWAN SUB-G Wireless I/O Module – UN433
- **WISE-4210-S231-NA** LPWAN IoT WSN Temp & RH Sensor- NA902/EU868
- **WISE-4210-S231-UA** LPWAN IoT WSN Temp & RH Sensor - UN433

WISE-S200 I/O Module

- **WISE-S214-A** 4AI/4DI
- **WISE-S250-A** 6DI, 2DO & 1RS-485
- **WISE-S251-A** 6DI & 1RS-485

* Power saving is not for downlink mode.

Accessories

- **1760002647-01** Bat.Cylindrical 3.6V/2500mAh AA Li/SOCl2
- **1750008836-01*** 863-870MHz Dipole Antenna for WISE-4210
- **1750008837-01*** 902-928MHz Dipole Antenna for WISE-4210

* AS923/EU868 version of WISE-4210 needs to order antenna separately

Dimensions

Unit: mm

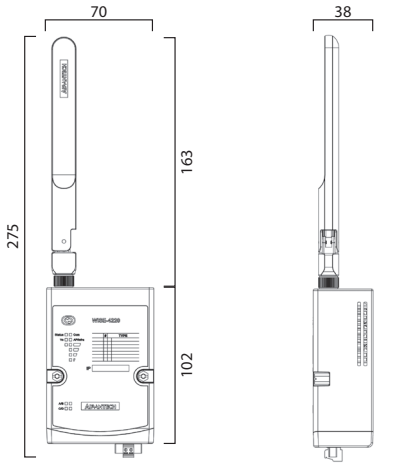

Front View Side View