WISE-4610

Advanced Industrial LoRa/LoRaWAN Wireless I/O Module

Features

- Private LoRa and LoRaWAN selectable
- Longer communication range
- Better penetration through concrete and steel
- Less interference than 2.4GHz spectrum
- Application-ready I/O combination with IP65 enclosure
- Powered by solar rechargeable battery or 10~50V_{DC} input
- GPS/Galileo/BeiDou/GLONASS support

Introduction

LPWAN is a type of wireless telecommunication wide area network designed to allow long range communications at a low data rate among IoT applications, such as sensors operated on a battery. Its benefits is to offer multi-year battery lifetime for sensors/applications to send small amounts of data over long distances a few times per hour suitable for different environments.

Private LoRa and LoRaWAN are one of category of LPWAN which belong to the non-cellular LPWAN wireless communication network protocols enables very long range transmissions with low power consumption, operating in the non-licensed spectrum.

Star Topology

The LoRaWAN networks in a star topology have gateway relaying the data between the sensor nodes and the network server.

Communication between the sensor nodes and the gateway goes over the wireless channel utilizing the LoRa physical layer, whilst the connection between the gateways and the central server are handled over a backbone IP-based network.

The LoRaWAN end nodes(sensors) typically use Low Power and are battery powered (Class A and Class C). LoRa embedded sensors that run on batteries that lasts from 2–5 years typically. The LoRa sensors can transmit signals over distances from 1km—10km.

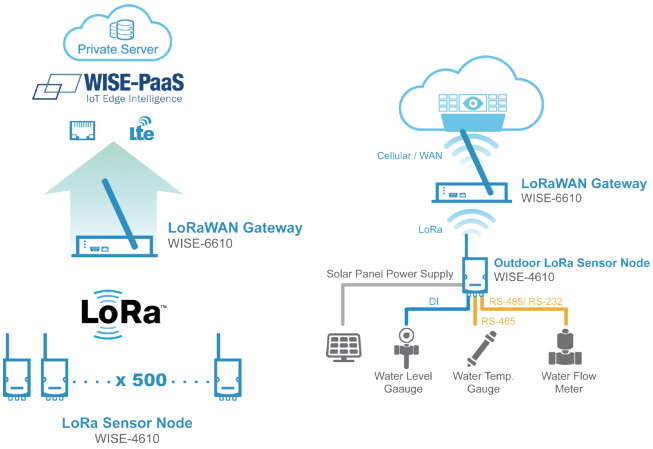

Common Specification

Wireless Communication

- **Standard** — LoRaWAN or Private LoRa
- **Frequency Band** — EU 863-870 (MHz) / US 902-928 (MHz) / AU 915-928 (MHz) / AS 919-924 (MHz) / JP 920-928 (MHz)
- **Spreading Factor** — 7~12
- **Outdoor Range** — 15Km (L.o.S) by pairing with WISE-6610 (with 2 dBi Antenna)
- **Transmit Power** — Up to +18dBm
- **Receiver Sensitivity** — Up to -136dBm at SF = 12 / 125KHz
- **Data Rate** — 50 kbps at FSK mode EU868
21.9 kbps at SF7 mode US915
5.47 kbps at SF7 mode JP923
- **Topology** — Star
- **Function** — End Node
- **Antenna Type** — External

GPS (Only Supported on WISE-4610P)

- **GNSS Systems** — GPS, GLONASS, Galileo, BeiDou, QZSS and SBAS signals
- **Max. Update Rate** — Single GNSS: up to 18 Hz
Concurrent GNSS: up to 10 Hz
- **Accuracy** — Position: 2.5 m CEP (50% confidence)
With SBAS: 2.0 m CEP (50% confidence)
- **Acquisition** — Cold starts: 57 s
Aided starts: 7 s
- **Antenna Type** — Internal

All product specifications are subject to change without notice.

Last updated: 7-Jul-2021

General

- **Power Input** — **WISE-4610P**
  Built-in 4100mAh Lithium rechargeable battery pack
  10~50V_{DC} external power
  17-50V_{DC} Solar Panel
  WISE-4610
  10~50V_{DC} external power
- **Battery Life** — 6 months (1 hour data update and 1 day GPS update)
- **Configuration Interface** — Micro-B USB
- **LED Indicator** — Status, Error, Tx, Rx, Battery/Signal Level
- **Mounting** — DIN 35 rail, wall, pole, and stack
- **Dimension (W x H x D)** — 82 x 122 x 49 mm (without antenna)

Operating Temperature

- **With rechargeable battery** — 0 ~ 60 °C (32 ~ 140 °F)
- **Without battery** — -25 ~ 70 °C (-13 ~ 158 °F)

Storage Temperature

- **With rechargeable battery** — -20 ~ 60 °C (-4 ~ 140 °F)
- **Without battery** — -40 ~ 85 °C (-40 ~ 185 °F)
- **Operating Humidity** — 5 ~ 95% RH (non-condensing)
- **Storage Humidity** — 0 ~ 95% RH (non-condensing)

WISE-S614 (4AI/4DI)

Analog Input

- **Channels** — 4
- **Resolution** — 16-bit
- **Sampling Rate** — 1Hz per channel
- **Accuracy** — ±0.1% of FSR (Voltage)
  ±0.2% of FSR (Current)
- **Input Range** — ±150mV, ±500mV, ±1 V, ±5V, ±10V, 0 ~ 150mV, 0 ~ 500mV, 0 ~ 1V, 0 ~ 5V, 0 ~ 10V, 0 ~ 20mA, 4 ~ 20mA , ±20mA
- **Input Impedance** — > 2M Ω (Voltage)
  240 Ω (External resistor for current)
- **Isolation Voltage** — 2000 V_{DC}
- **Common Mode Voltage** — 350 V_{DC}
- **Drift** — Unipolar ±100ppm
  Bipolar ±50ppm
- **Burn-out Detection** — Yes (4~20mA only)
- **Supports Data Scaling and Averaging**

Digital Input

- **Channels** — 4
- **Input Type** — Dry Contact (Wet Contact by request)
- **Logic Level** — 0: Open
  1: Close to DI COM
- **Supports 200Hz Counter Input (32-bit + 1-bit overflow)**
- **Keep/Discard Counter Value when Power-off**
- **Supports Inverted DI Status**

WISE-S615 (4 RTD)

Analog Input

- **Channels** — 4 differential
- **Input Connections** — 2, 3-wire
- **Input Impedance** — 10 MΩ
- **Resolution** — 15 bits
- **Sampling Rate** — 1 Sample/s (MAX)
- **RTD Types and Temperature Ranges**
  Pt 100 RTD
  RTD 100 (a = 0.00385) -200°C to 600°C
  RTD 100 (a = 0.00392) -200°C to 600°C
  Pt 1000 RTD
  Pt -40°C to 160°C
- **Accuracy** — ±0.1% FSR
- **CMR @ 50/60 Hz** — 90 dB
- **NMR @ 50/60 Hz** — 60 dB
- **Span Drift** — ± 100 ppm/°C

WISE-S617 (2AI/2DI/1DO/1RS-485)

灵中 研伟科技 15153176600

Digital Input

- **Channel** — 2
- **Logic Level (Dry Contact)** — 0: Open
  1: Close to DI COM
- **Non-isolation**
- **Supports 32-bit counter input function (maximum signal frequency: 200 Hz)**
- **Supports keep/discard counter value when power OFF**
- **Supports frequency input function (maximum signal frequency: 200 Hz)**
- **Supports inverted digital input status**

Analog Input

- **Channels** — 2
- **Resolution** — 16 bit
- **Sampling Rate** — 1 Hz per channel
- **Accuracy** — ±0.1% of FSR (Voltage)
  ±0.2% of FSR (Current)
- **Input Range** — ±1 V, ±5V, ±10V, 0 ~ 1V, 0 ~ 5V, 0 ~ 10V, 0 ~ 20mA, 4 ~ 20mA, ±20mA
- **Input Impedance** — > 2M Ω (Voltage)
  120 Ω (External Resistor for Current)
- **Isolation Voltage** — 2000 V_{RMS}
- **Common Mode Voltage** — 350 V_{DC}
- **Drift** — Unipolar ±100ppm
  Bipolar ±50ppm
- **Burn-Out Detection** — Yes (4 ~ 20mA only)
- **Supports data scaling and averaging**

Digital Output

- **Channel** — 1 (Sink Type)
- **Non-isolation**
- **Output Current** — 100mA

COM Port

- **Port Type** — RS-485
- **Baud Rate (bps)** — 1200, 2400, 4800, 9600, 19200, 38400, 57600, 115200
- **Data Bits** — 7, 8
- **Stop Bits** — 1, 2
- **Parity** — None, Odd, Even
- **Flow Control** — Auto flow control
- **Signals** — DATA+ and DATA-
- **Protection** — 15 kV ESD
- **Supported Protocols** — Modbus/RTU (Up to 32 addresses with a maximum of 8 instructions)

WISE-S672 (6DI/1RS-485/1RS-485 or RS-232)

COM Port

- **Port Number** 2
- **Type** COM1: RS-485
  COM1: RS-485/232
- **Serial Signal** RS-485: DATA+, DATA-
  RS-232: Tx, Rx, GND
- **Data Bits** 7, 8
- **Stop Bits** 1, 2
- **Parity** None, Odd, Even
- **Baud Rate (bps)** 1200, 2400, 4800, 9600, 19200, 38400, 57600, 115200
- **Protection** 15 kV ESD
- **Protocol** Modbus/RTU (Total 32 address)

Digital Input

- **Channels** 6
- **Input Type** Dry Contact
- **Logic Level** 0: Open
  1: Close to DI COM
- **Supports 200Hz Counter Input (32-bit + 1-bit overflow)**
- **Keep/Discard Counter Value when Power-off**
- **Supports Inverted DI Status**

Ordering Information

WISE-4610 Advanced Industrial LoRaWAN Module

- **WISE-4610-NA** Advanced Industrial LoRaWAN Module - NA915

Firmware Image (Optional)	
96634610J00	WISE-4610 JA Patch
96634610T00	WISE-4610 TA AS923 Patch
96634610Z00	WISE-4610 ZA Patch

- **WISE-4610-EA** Advanced Industrial LoRaWAN Module - EU868
- **WISE-4610P-NA** Advanced Industrial LoRaWAN I/O Module w/ GPS & battery - NA915

Firmware Image (Optional)	
96634610J00	WISE-4610 JA Patch
96634610T00	WISE-4610 TA AS923 Patch
96634610Z00	WISE-4610 ZA Patch

- **WISE-4610P-EA** Advanced Industrial LoRaWAN I/O Module w/ GPS & battery - EU868

WISE-S600 IP65 I/O Module with M12 Connectors

- **WISE-S614-A** 4AI/4DI
- **WISE-S615-A** 4RTD
- **WISE-S617-A** 2AI/2DI/1DO/1RS-485 w/ 2ch 12V_{DC} power output
- **WISE-S672-A** 6DI/1RS-485/1RS-485 or RS-232

WISE-S600T I/O Module with Terminal Block

- **WISE-S614T-A** 4AI/4DI
- **WISE-S615T-A** 4RTD
- **WISE-S617T-A** 2AI/2DI/1DO/1RS-485 w/ 2ch 12V_{DC} power output

Accessories

- **1654011516-01** M12, A-code, 8 Pin, Male
- **1655005903-01** M12, A-code, 4 Pin, Female
- **1700028162-01** M12, A-code, 4 pin, Female with 1M cable
- **1700028163-01** M12, A-code, 8 Pin, Male with 1M cable
- **PWR-242-AE** DIN Rail Power Supply (2.1A Output Current)
- **PWR-244-AE** Panel Mount Power Supply (4.2A Output Current)

Pin Assignment

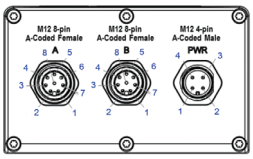

	Model Name	M12 Cable	WISE-S614	WISE-S615	WISE-S617	WISE-S672
	Pin Number					
	P/N	4Pin : 1700028162-01 8Pin : 1700028163-01	WISE-S614-A	WISE-S615-A	WISE-S617-A	WISE-S672-A
A	1	White	DI0	RTD0+	AI0+	DI0
	2	Brown	DI1	RTD0-	AI0-	DI1
	3	Green	DI2	RTD0 COM	+12V Out0	DI2
	4	Yellow	DI3	NC	+12V Out GND	DI3
	5	Gray	NC	RTD1+	AI1+	DI4
	6	Pink	NC	RTD1-	AI1-	DI5
	7	Blue	NC	RTD1 COM	+12V Out1	NC
	8	Red	DI COM	NC	+12V Out GND	DI COM
B	1	White	AI0+	RTD2+	DI0	RS-485 D1-
	2	Brown	AI0-	RTD2-	DI1	RS-485 D1+
	3	Green	AI1+	RTD2 COM	DI COM	RS-232 TX
	4	Yellow	AI1-	NC	DO0	RS-232 RX
	5	Gray	AI2+	RTD3+	DO GND	RS-485 D2-
	6	Pink	AI2-	RTD3-	RS-485 D+	RS-485 D2+
	7	Blue	AI3+	RTD3 COM	RS-485 D-	NC
	8	Red	AI3-	NC	RS-485 GND	RS-232 GND
PWR	1	Brown	+VS	+VS	+VS	+VS
	2	White	-VS	-VS	-VS	-VS/ SP-
	3	Blue	SP+	SP+	SP+	SP+
	4	Black	SP-	SP-	SP-	NC

Dimensions
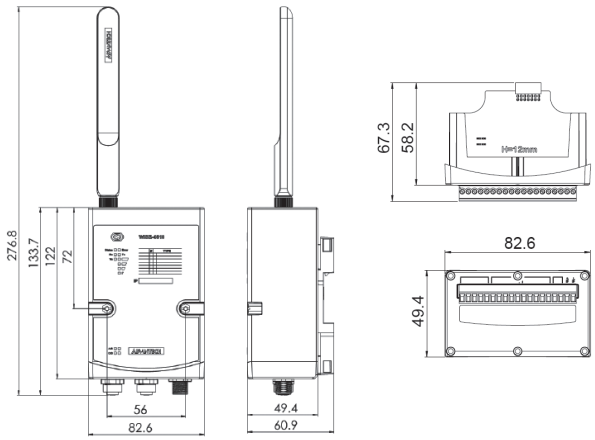
Unit: mm