WISE-4051

8-ch Digital Input IoT Wireless I/O Module with RS-485 Port

CE FC ANATEL SRRC

Features

- 8-ch digital input with 1-port RS-485 for Modbus devices
- 2.4GHz Wi-Fi reducing the wiring cost during big data acquisition
- Easily extend the existing network by adding APs, and share existing Ethernet software
- Configured by mobile devices directly without installing any software or Apps
- Zero data loss using the log function with RTC time stamp
- Data can be automatically pushed to Dropbox or computer
- Supports RESTful web API in JSON format for IoT integration

Introduction

The WISE-4051 is an Ethernet-based wireless IoT device, integrated with IoT data acquisition, processing, and publishing functions. As well as various I/O types, the WISE-4051 provides data pre-scaling, data logic, and data logger functions. Data can be accessed via mobile devices and be securely published to the cloud anytime from anywhere.

Features

IEEE 802.11 b/g/n 2.4GHz Wi-Fi with AP Mode

The Wi-Fi interface is easily integrated with wired or wireless Ethernet devices, users only need to add a wireless router or AP to extend existing Ethernet network to wireless. The limited AP mode enables the WISE-4000 to be accessed via other Wi-Fi devices directly as an AP.

Modbus/RTU to Web Service or Modbus/TCP

The RS-485 port of the WISE-4051 supports Modbus, which can be used to poll the data from Modbus/RTU devices, like ADAM-4000, or ADAM- 5000/485. Then you can access the data by Modbus or REST from the WISE-4051. The data can also be logged.

RESTful Web Service with Security Socket

As well as supporting Modbus/TCP, the WISE-4051 series also supports IoT communication protocol, RESTful web service. Data can be polled or even be pushed automatically from the WISE-4051 when the I/O status is changed. The I/O status can be retrieved over the web using JSON. The WISE-4051 also supports HTTPS which has security that can be used in a Wide Area Network (WAN).

Data Storage

The WISE-4000 can log up to 10,000 samples of data with a time stamp. The I/O data can be logged periodically, and also when the I/O status changes. Once the memory is full, users can choose to overwrite the old data to ring log or just stop the log function.

Cloud Storage

Data logger can push the data to file-based cloud services like Dropbox using pre-configured criteria. With RESTful API, the data can also been pushed to a private cloud server in the format of JSON. Users can setup their private cloud server using the provided RESTful API and their own platform.

All product specifications are subject to change without notice.

Specifications

Digital Input

- **Channels** 8
- **Logic Level** Dry Contact 0: Open
  1: Close to DCOM
  Wet Contact 0: 0 ~ 3 V_{DC}
  1: 10 ~ 30 V_{DC} (3 mA min.)
- **Isolation** 3,000 V_{rms}
- **Supports 3 kHz Counter Input (32-bit + 1-bit overflow)**
- **Keep/Discard Counter Value when Power-off**
- **Supports 3 kHz Frequency Input**
- **Supports Inverted DI Status**

Serial Port

- **Port Number** 1
- **Type** RS-485
- **Serial Signal** DATA+, DATA-
- **Data Bits** 7, 8
- **Stop Bits** 1, 2
- **Parity** None, Odd, Even
- **Baud Rate** (bps) 1200, 2400, 4800, 9600, 19200, 38400, 57600, 115200
- **Protection** 15 kV ESD
- **Protocol** Modbus/RTU (Total 32 address by max. 8 instructions)

General

- **WLAN** IEEE 802.11b/g/n 2.4GHz
- **Outdoor Range** 110 m with line of sight
- **Connectors** Plug-in screw terminal block (I/O and power)
- **Watchdog Timer** System (1.6 second) and Communication (programmable)
- **Certification** CE, FCC, R&TTE, NCC, SRRC, RoHS
- **Dimensions (W x H x D)** 80 x 148 x 25 mm
- **Enclosure** PC
- **Mounting** DIN 35 rail, wall, and stack
- **Power Input** 10 ~ 30 V_{DC}
- **Power Consumption** 2.2 W @ 24 V_{DC}
- **Power Reversal Protection**
- **Supports User Defined Modbus Address**
- **Supports Data Log Function** Up to 10000 samples with RTC time stamp
- **Supported Protocols** Modbus/TCP, TCP/IP, UDP, DHCP, and HTTP, MQTT
- **Supports RESTful Web API in JSON format**
- **Supports Web Server in HTML5 with JavaScript & CSS3**
- **Supports System Configuration Backup and User Access Control**

Environment

- **Operating Temperature** -25 ~ 70°C (-13~158°F)
- **Storage Temperature** -40 ~ 85°C (-40~185°F)
- **Operating Humidity** 20 ~ 95% RH (non-condensing)
- **Storage Humidity** 0 ~ 95% RH (non-condensing)

Pin Assignment

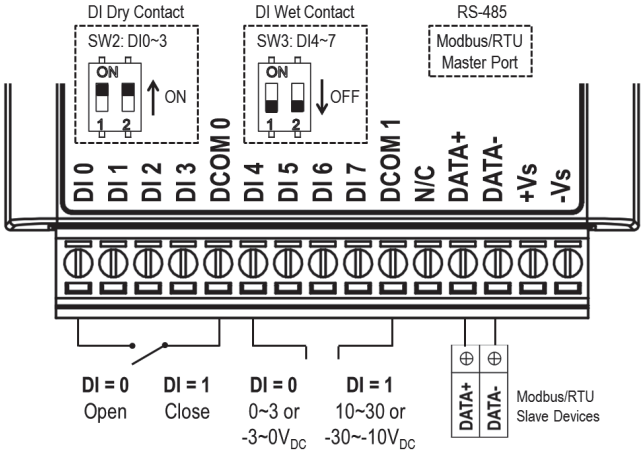

Ordering Information

- **WISE-4051-AE** 8-ch Digital Input IoT Wireless I/O Module with RS-485 Port

Selection Table

Model Name	Universal Input	Digital Input	Digital Output	Relay Output	RS-485
WISE-4012	4		2		
WISE-4050		4	4		
WISE-4051		8			1
WISE-4060		4		4	

Accessories

- **PWR-242-AE** DIN-rail Power Supply (2.1A Output Current)
- **PWR-243-AE** Panel Mount Power Supply (3A Output Current)
- **PWR-244-AE** Panel Mount Power Supply (4.2A Output Current)

Dimensions

Unit: mm

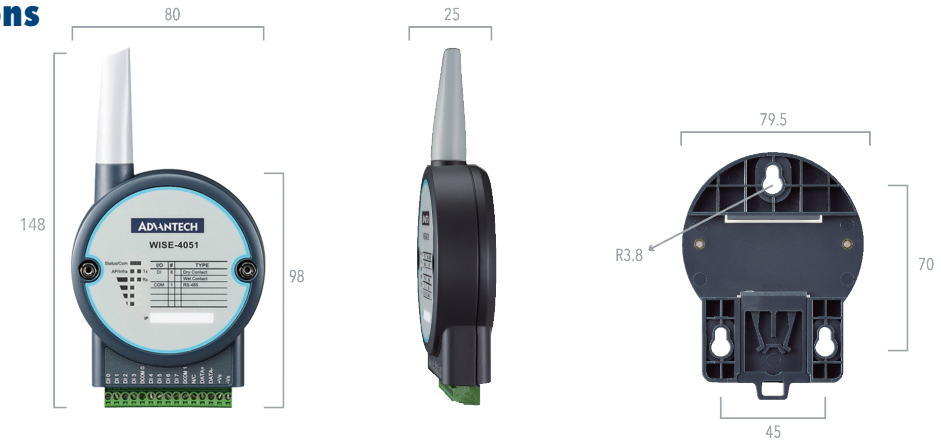

Front View Side View Mounting Kit