TPC-1551T(B)

15" XGA TFT LED LCD Thin-Client Terminal with Intel® Atom™ Processor

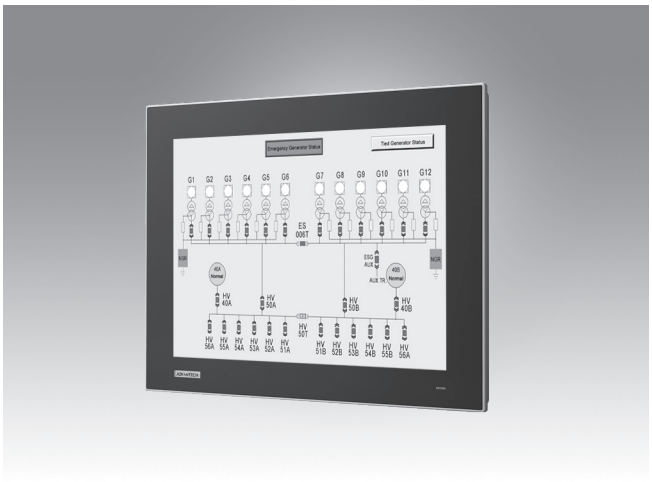

Features

- Industrial-grade 15" XGA TFT LCD with 70K lifetime and LED backlight
- Intel® Atom™ E3845 1.91GHz Quad-core processor with 4 GB DDR3L SDRAM
- Wide operating temperature range -20 ~ 60 °C (-4 ~ 140 °F)
- True-flat touchscreen with IP66-rated front panel and default VESA 100x100
- Front-facing LED indicators to show operating status
- Durable touchscreen with 5-wire resistive touch control
- Default Advantech's iDoor technology and SSD/HDD bay
- Compact, fanless embedded system with aluminum alloy front bezel and chassis grounding protection
- Default VESA 100x100
- Supports Advantech's SNMP Subagent software
- Supports Advantech's WISE-PaaS/RMM remote management software

Introduction

TPC-1551(B), an upgraded version of TPC-1551T(A), is a thin client terminal equipped with a 15" XGA TFT LCD, low-power Intel® Atom™ E3845 1.91GHz quad core processor, and 4GB DDR3A SDRAM to deliver high performance yet compact and fanless computing system. To provide enhanced durability and satisfy diverse applications of industrial automation, TPC-1551T(B) supports a wide operating temperature range (-20 ~ 60 °C/-4 ~ 140 °F) and comes with true flat 5-wire resistive touchscreen with IP66 rated front panel, die cast aluminum alloy front bezel and default VESA 100 x100. Moreover, TPC-1551T(B) includes two full-size mini PCIe slots with mSATA and USB/PCIe interface. Via mPCIe slot supporting Advantech's iDoor technology for function expansions such as additional I/O ports, isolated digital I/O, fieldbus protocols, 3G/GPS/GPRS/Wi-Fi communication and MRAM.

Specifications

General

- **BIOS** AMI UEFI
- **Certification** BSMI, CCC, CE, FCC Class A, UL
- **Cooling System** Fanless design
- **Dimensions (W x H x D)** 383.2 x 307.3 x 55.9 mm (15.09 x 12.10 x 2.2 in)
- **Enclosure** Front bezel: Die cast aluminum alloy
Back housing: SECC
- **Mounting** VESA Mount, Desktop, Wall or Panel Mount
- **OS Support** Microsoft® WES7 (32/64-bit), Windows 7 (32/64-bit), Windows 10 Enterprise LTSB, Android, Advantech Linux
- **Power Consumption** 25W typical, 50W max.
- **Power Input** 24 V_{DC} +/- 20%
- **Watchdog Timer** 1 ~ 255 sec (system)
- **Weight (Net)** 4.4kg (9.7lbs)

System Hardware

- **CPU** Intel® Atom™ E3845 1.91GHz Quad-core processor
- **Memory** 1 x SODIMM with 4 GB DDR3L SDRAM (supports up to 8 GB)
- **LAN** Intel I210; 10/100/1000BASE-T x 2
- **Expansion Slots** 1 x Full-size mini PCIe (USB+PCIe interface)
- **Storage** 1 x 2.5" SATA SSD, 1 x mSATA
- **I/O** 1 x RS-232
1 x RS-232/422/485
1 x USB 3.0
3 x USB 2.0
1 x iDoor slot

LCD Display

- **Display Type** XGA TFT LED LCD
- **Display Size** 15"
- **Max. Resolution** 1024 x 768
- **Max. Colors** 16.2M
- **Luminance cd/m²** 300
- **Viewing Angle (H/V°)** 176/176
- **Backlight Life** 70,000 hr
- **Contrast Ratio** 2000:1

Touchscreen

- **Lifespan** 36 million touches at a single point
- **Light Transmission** Above 75%
- **Resolution** Linearity
- **Type** 5-wire analog resistive

Environment

- **Humidity** 10 ~ 95% RH @ 40°C, non-condensing
- **Ingress Protection** Front panel: IP66
- **Operating Temperature** -20 ~ 60 °C (-4 ~ 140 °F)
- **Storage Temperature** -30 ~ 70 °C (-22 ~ 158 °F)
- **Vibration Protection** With SSD: 1 Grms (5 ~ 500 Hz) (Operating, random vibration)

Rear View

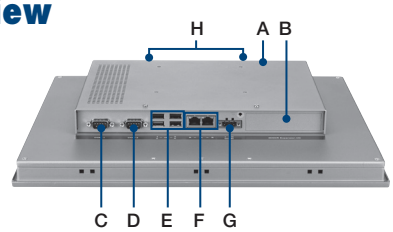

A. Default HDD/SSD Bay
B. iDoor slot
C. RS-232
D. RS-232/422/485
E. USB 2.0 & 3.0
F. LAN (10/100/1000)
G. Power Receptor
H. Antenna Opening

All product specifications are subject to change without notice.

Dimensions

Unit: mm

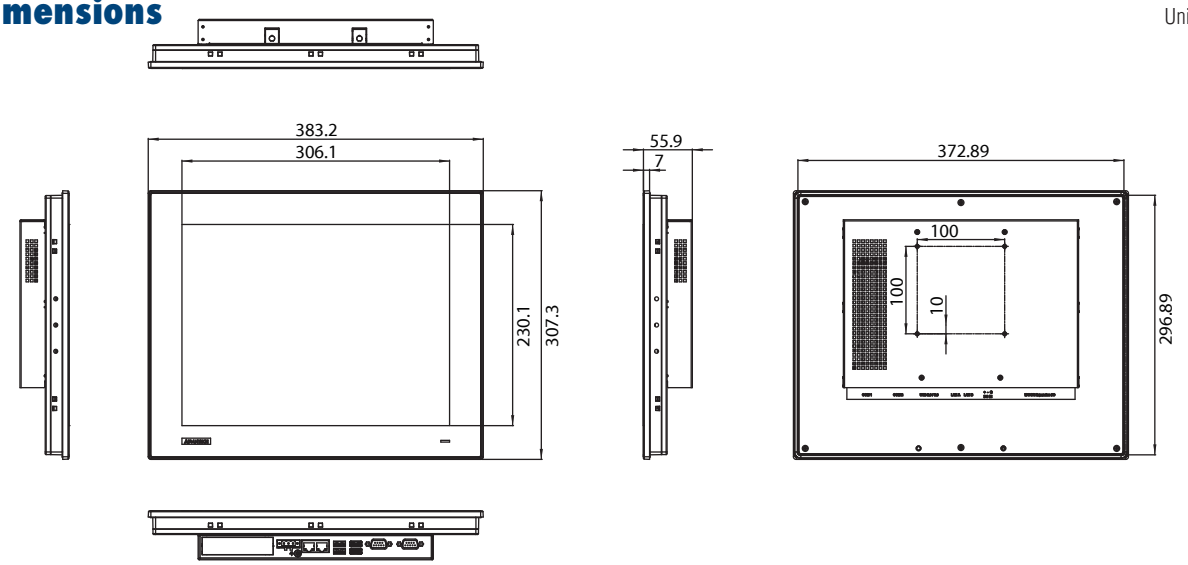

TPC-1551T-B Panel Cutout Dimensions: 374.5 x 298.5 mm (14.74 x 11.75 in)

Ordering Information

- **TPC-1551T-E3BE** 15" XGA Panel PC, Intel® Atom™ E3845 1.91GHz Quad-core Processor, 4GB (True-flat touchscreen)
- **TPC-1551T-E3BU** 15" XGA Panel PC, Intel® Atom™ E3845 1.91GHz Quad-core Processor, 4GB (True-flat touchscreen) (For USA only)

Note: Optional Intel® Atom™ J1900 by project request

Optional Accessories

- **PWR-247-DE** 60W 24 V_{DC} /2.5A power supply
- **1702002600** Power Cable US Plug 1.8 M
- **1702002605** Power Cable EU Plug 1.8 M
- **1702031801** Power Cable UK Plug 1.8 M
- **1700000596-11** Power Cable China/Australia Plug 1.8 M

Embedded OS

- **20703WE7PS0027** TPC-xx51T(B) WS7P x86 MUI Image V4.19
- **20703WE7PS0028** TPC-xx51T(B) WS7P x64 MUI Image V4.19
- **20703WX9ES0023** TPC-xx51T(B) Win10 x64 LTSC v6.05 B015 Entry (2020)
- **20703AI0NS0010** TPC-xx51T(B) Android v6.0
- **20701LUB1S0005** TPC-xx51T(B) Advantech Linux Ubuntu 20.04

iDoor Modules

- **PCM-26D2CA-AE** SJA1000 CANBus, CANOpen, DB9 x 2
- **PCM-26D1DB-MAE** Hilscher netX100 FieldBus, ProfiBus, DB9 x 1
- **PCM-27D24DI-AE** Digital I/O, 16 DI / 8 DO, Isolation, DB37 x 1
- **PCM-24D2R4-BE** OXPCIe-952 UART, Isolated RS-422/485, DB9 x 2
- **PCM-24D2R2-BE** OXPCIe-952 UART, Isolated RS-232, DB9 x 2
- **PCM-24R2GL-AE** 2 Port Giga LAN Intel i350 PCIe mini card
- **PCM-24R1TP-AE** Intel 82574L, GbE, IEEE 1588 PTP, RJ45 x 1
- **PCM-262R2EC-MAE** Hilscher netX100 FieldBus mPCIe, EtherCAT, RJ45 x 2, Master
- **PCM-27J3AU-AE** 3-Port Audio Stereo, mPCIe, 3.5 mm Jack
- **PCM-29R1TX-AE** 1-Port iLink(TX), Long Distant Display Transmitter, RJ45

Application Software

WebAccess/SCADA	Advantech WebAccess/SCADA is a 100% browser-based IIoT software platform aimed at supervisory control and data acquisition (SCADA) operations. WebAccess/SCADA provides open interfaces that allow our customers and partners to develop unique IoT applications for different vertical markets. In addition to supporting traditional SCADA functions, the platform features an HTML5-based user interface and intelligent dashboard to facilitate cross-platform, cross-browser data analysis. Moreover, WebAccess/SCADA not only offers built-in widgets, but is also equipped with an innovative Widget Builder that enables customers to build their own widgets.
WebAccess/HMI	Advantech WebAccess/HMI is human-machine interface (HMI) software based on Microsoft's Windows operating system. This software features excellent communication and monitoring capabilities, supports more than 350 PLC communication protocols, and offers a wide choice of screen design objects to satisfy diverse integrations of factory automation and HMI operation and monitoring requirements.

Please note: If some optional modules are offered with the system, additional system certificates may be required in certain regions/countries.
Please contact Advantech for certificate compliance.