ESRP-CSS-UNO137

Compact DIN-Rail Controller with Intel® Atom® E3940 CPU, 2 x LAN, 2 x COM, 3 x USB 3.0, 1 x USB 2.0, 2 x DP 1.2, 8 x DI, 8 x DO, 1 x M.2, 1 x mPCIe, and TPM 2.0

Features

- Intel® Atom® E3940 processor (1.6 GHz) with 8GB DDR3L memory
- Wide power input range (10 ~ 36 V_{DC})
- Wide operating temperature range (-40 ~ 70 °C/-40 ~ 158 °F)
- Port isolation for 8 x DI, 8 x DO, 2 x COM
- DP++ ensures HDMI/DVI compatibility
- Dual storage: M.2 2242 SATA SSD and 2.5" HDD/SSD
- Onboard TPM 2.0 provides hardware-based security
- Supports M.2 3042/M.2 3052 module
- Compliant with IEC 61010-1 safety requirements
- WISE-EdgeLink supports more than 200 PLC device
- Extends Azure cloud intelligence and analytics to edge devices

Introduction

ESRP-CSS-UNO137 of edge intelligence computer is great solution to extend cloud intelligence and analytics to edge devices. IoT solutions, such as stream analytics, machine learning, image recognition, and other high-value AI modules, can be deployed from the Azure cloud to the edge to support diverse applications. All data are collected and delivered to cloud by WISE-EdgeLink and secured by key encryption technology from embedded security chip.

Specifications

General

- **Certification** CE, FCC, UL 61010-2-201, CCC, BSMI
- **Dimensions (W x D x H)** 35 x 105 x 150 mm (1.4 x 4.1 x 5.9 in)
- **Form Factor** Small
- **Enclosure** Aluminum housing
- **Mounting** DIN-rail
- **Weight (Net)** 0.8 kg (1.7 lb)
- **Power Requirement** 10 ~ 36 V_{DC}
- **Power Consumption** 21W (typical), 47W (max.)
  *For USB iDoor (PCM-24U2U3-BE): 56W max.
  *For PoE iDoor (PCM-24R2PE-AE): 77W max.
- **OS Support** AdvLinux (Ubuntu 18.04)

System Hardware

- **BIOS** AMI UEFI (128 Mbit)
- **Watchdog Timer** Programmable timer with 255 intervals (1 ~ 255 sec)
- **Hardware Security** TPM2.0
- **Processor** Intel® Atom® E3940, 1.6 GHz (up to 1.8 GHz)
- **Memory** Built-in 8 GB DDR3L, 1600 MHz (Up to 8 GB)
- **Graphics Engine** Intel® HD Graphics
- **Ethernet** Intel® i210-IT GbE, IIEEE802.1AS, 802.3az
- **LED Indicators** 1 x Programmable LED, 1 x power LED, 1 x RTC battery LED, and LAN (active, status)
- **Storage** Built-in 128G 2.5" SSD
  1 x M.2 B key 2242 SSD
- **Expansion** 1 x Full-size mPCIe (PCIe/USB signal)
  1 x M.2 (B-key) 2242 SSD (SATA signal), 3042/3052 cellular module (USB signal)
  1 x nano SIM card slot

*SATA ignal speed should be configured to "Gen2" once 2.5 SSD/HDD installed.

I/O

- **Isolated Serial Ports** 2 x RS-232/422/485 (terminal block)
  50bps ~115.2 kbps (isolation protection: 2500 VDC)
- **LAN** 2 x 10/100/1000 Mbps IEEE 802.3u 1000 BASE-T (RJ45)
- **USB** 3 x USB 3.2 Gen 1, 1 x USB 2.0 (Type A)
- **Isolated DI/O** 8 x Digital input channels with 2500 V_{DC} isolation protection
  - Wet contact: Logic 0: 10 ~ 30 V_{DC}/ Logic 1: 0 ~ 3 V_{DC}
  - Dry contact: Logic 0: Shorted to GND/ Logic 1: Open

  8 x Digital output channels
  - Output voltage: 5 ~ 30 V_{DC}
  - Output capability sink: 500 mA max./channel
- **Displays** 2 x DP 1.2, up to 4096 x 2306 @ 60 Hz
- **Power Connector** 1 x 2-pin terminal block

Environment

- **Operating Temperature*** -40 ~ 70 °C/-40 ~ 158 °F with 0.7m/s airflow, with wide-temperature (-40 ~ 85 °C/-40 ~ 185 °F) peripherals (e.g., SSD, wireless modules)
- **Storage Temperature** - 40 ~ 85 °C/-40 ~ 185 °F
- **Relative Humidity** 95% RH @ 40 °C/104 °F, non-condensing
- **Shock Protection** Operating, IEC 60068-2-27, 50G, half sine, 11ms
- **Vibration Protection** Operating, IEC 60068-2-64, 4 Grms, random, 5 ~ 500 Hz, 1hr/axis (SSD)
  Operating, IEC 60068-2-64, 0.3 Grms, random, 5 ~ 500 Hz, 1hr/axis (HDD)
- **Ingress Protection** IP40

*Operating temperature with M.2 SSDs should be maintained under 60 °C/140 °F.

Installation Scenario

DIN-rail mounting installation

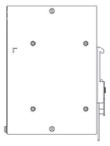

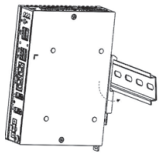

昊生 研伟科技 15323776609

Dimensions

Unit: mm

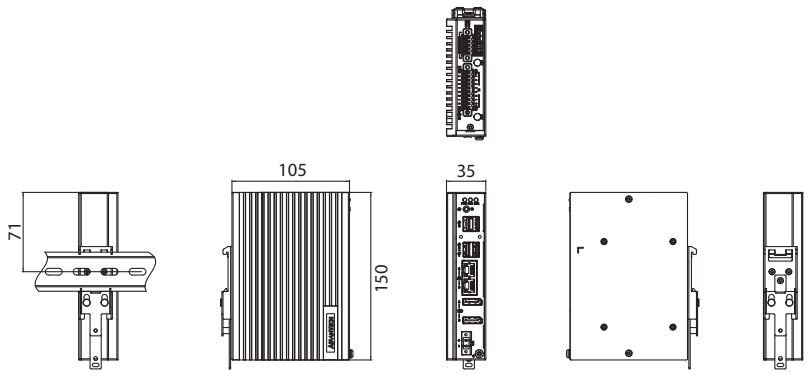

(With optional extension kit)

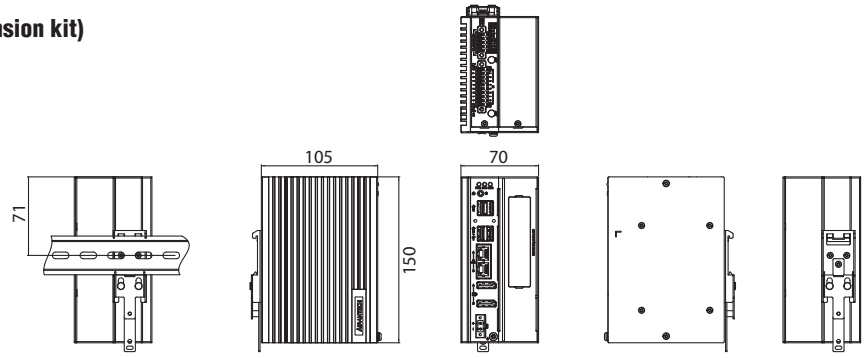

Front I/O

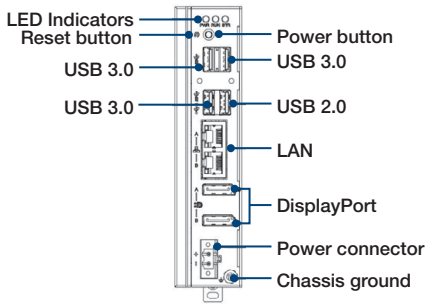

Top I/O

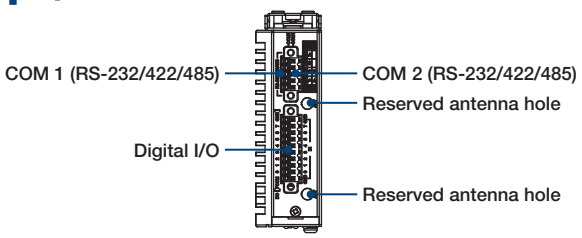

Ordering Information

- **UNO-137-E13BA** Compact DIN-rail controller with Intel® E3940 CPU (1.6 GHz), 8 GB DDR3L, 2 x LAN, 2 x COM, 4 x USB, 8 x DI/O

Extension Kit

- **UNO-137-ID1EA** UNO-137-E13BA W/ WISE-EdgeLink 4000 Tags

Optional Accessories

- **UNO-137-VEGA330** Accessory kit for VEGA-330

DIN-Rail Power Supply

- **PSD-A60W24** 60W Compact DIN-rail power supply
- **96PSD-A120W24-MN** A/D 100 ~ 240V, 120W, 24V NDR DIN rail
- **PSD-A120W24** DIN rail A/D 100 ~ 240V, 120W, 24V (recommended for use with PoE iDoor module)

Adapter & Power Cable

- **XARK-ADP-90MDH** Adaptor A/D 100 ~ 240V, 90W, 19V, W/PFC C6 cord end, 2 pin
- **1700001524** Power Cord UL 3P 10A 125V 183cm for US
- **170203183C** Power Cord EU 3P 2.5A 250V 183cm for EU
- **170203180A** Power Cord BSI 3P 2.5A 250V 183cm for UK
- **1700019146** Power Cord CCC 3P 2.5A 250V 183cm for CN
- **1700018553** Power Cord SAA 3P 2.5A 250V 183cm for AU
- **96PSA-A120W24T2-3** ADP A/D 100-240V 120W 24V C14 CORD END 62368 (recommended for use with PoE iDoor module)
- **1702002600** Power cable US plug, 1.8 M (industrial grade)
- **1702002605** Power cable EU plug, 1.8 M (industrial grade)
- **1702031801** Power cable UK plug, 1.8 M (industrial grade)
- **1700000596-11** Power cable China/Australia plug, 1.8 M (industrial grade)

Please note: If some optional modules are offered with the system, additional system certificates may be required in certain regions/countries.
Please contact Advantech for certificate compliance.