ESRP-CMS-UNO2271

Pocket Size Industrial ACP Ready ThinClient, 1 x HDMI, 4 x USB

Features

- Verified with ACP ThinManager, ACP BIOS enabled
- Industrial design with higher reliability
- 2 x GbE, 3 x USB 2.0, 1 x UBS 3.0, 1 x HDMI
- Compact fanless design in pocket size (3.9" x 2.8" x 2.6")
- Support multiple mounting
- Chassis grounding protection
- Two independent LANs support Ethernet redundancy allowing the terminal to activate and switch to the backup port in a seamless fashion

Introduction

Realize the true value of thin client and centralized management technologies with Advantech's ThinManager compatible industrial thin clients. ACP's ThinManager, the leading thin client solution for the factory floor, and Advantech's industrially hardened thin client hardware provide a unique solution for centralized management of factory floor applications. The ESRP-CMS-UNO2271 is the perfect ThinManager pocket-size industrial thin client for applications where flexibility and cost savings of client is desired. SRP-FPV240-01 also supports full HD HDMI and up to four USB ports.

Specifications

General

- **Certification** CE, FCC, UL, CCC, BSMI
- **Dimensions (W x D x H)** 100 x 70 x 65 mm (3.9" x 2.8" x 2.6")
- **Form Factor** Pocket Size, same dimension as standard 2.5" SSD/HDD
- **Enclosure** Aluminum Housing
- **Mounting** Stand, Wall, VESA (Optional), DIN-rail (Optional), Pole (Optional)
- **Weight (Net)** 0.6 kg (1.2lbs)
- **Power Requirement** 10 ~ 30V_{DC}
- **Power Consumption** 12W (Typical), 20W (Max)

System Hardware

- **BIOS** ACP BIOS enabled
- **Processor** Intel Atom E3815 1.46GHz
- **System Chip** Intel Atom SoC integrated
- **Memory** Onboard 4GB DDR3L 1066 MHz
- **Graphics Engine** Intel® HD Graphics
- **Ethernet** Realtek RTL8111E GbE, 802.10av
- **LED Indicators** LEDs for Power, LAN (Active, Status)

I/O Interfaces

- **LAN Ports** 2 x RJ45, 10/100/1000 Mbps IEEE 802.3u 1000Base-T Fast Ethernet
- **USB Ports** 3 x USB 2.0 and 1 x USB 3.0
- **Displays** 1 x HDMI, supports 1920 x 1080 @ 60Hz
- **Power Connector** 1 x 2 pins, terminal block
- **Grounding Protection** Chassis grounding

Environment

- **Operating Temperature** 0 ~ 50°C (32 ~ 122°F) @ 5 ~ 85% RH with 0.7 m/s airflow
- **Storage Temperature** - 20 ~ 70°C (-4 ~ 158°F)
- **Relative Humidity** 10 ~ 95% RH @ 40°C, non-condensing
- **Shock Protection** Operating, IEC 60068-2-27, 50G, half sine, 11 ms
- **Vibration Protection** Operating, IEC 60068-2-64, 2 Grms, random, 5 ~ 500 Hz, 1hr/axis
- **Ingress Protection** IP30

Installation Scenario

研伟科技 15322

DIN-Rail Mount Illustration

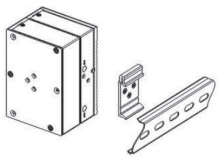

Pole Mount Illustration

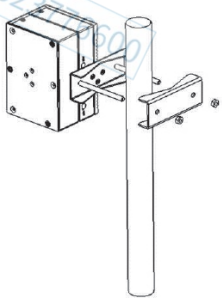

VESA Mount Illustration

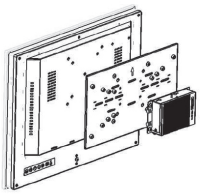

THINMANAGER
A Rockwell Automation Technology

All product specifications are subject to change without notice.

Last updated: 4-May-2021

Dimensions

Unit: mm

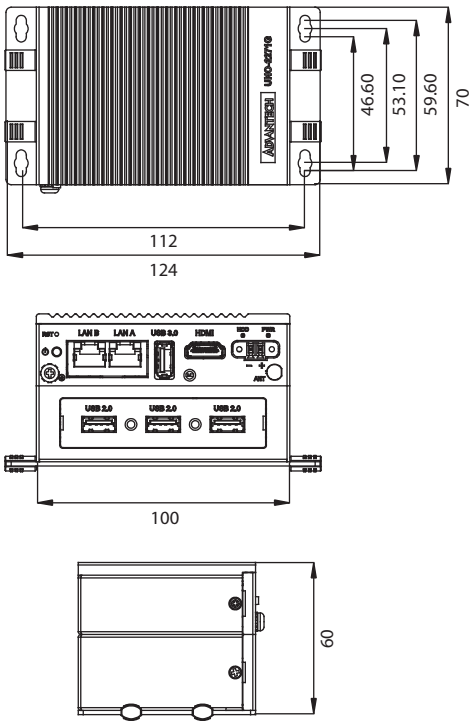

Ordering Information

- **ESRP-CMS-UNO2271** UNO-2271G-E22AE, ACP Ready ThinClient, HDMI x 1, USB x 4

Optional Accessories

- **96PSA-A60W24T2** 100-240V 60W 24V 2.5A Power Adapter (Industrial Grade)
- **1702002600** Power Cable US Plug 1.8 M (Industrial Grade)
- **1702002605** Power Cable EU Plug 1.8 M (Industrial Grade)
- **1702031801** Power Cable UK Plug 1.8 M (Industrial Grade)
- **1700000596** Power Cable China/Australia Plug 1.8 M (Industrial Grade)
- **UNO-2271G-DMKAE** UNO-2271G DIN RAIL Kit
- **UNO-2000G-VMKAE** UNO-2000 VESA Mount Kit
- **UNO-2000G-PMKAE** UNO-2000 Pole Mount Kit

Monitor Cabling Accessories

***Available in America**

- **XACP-10DP-DPHM-10** DisplayPort to HDMI Cable, 10ft
- **XACP-10DP-DPDVI-10** DisplayPort to DVI Cable, 10ft
- **XACP-10HM-15128-03** HDMI to DVI Cable, 10ft
- **XACP-10DP-DPDP-10** DisplayPort to DisplayPort Cable, 10ft
- **XACP-10HM-128V4-10** HDMI to HDMI Cable, 10ft
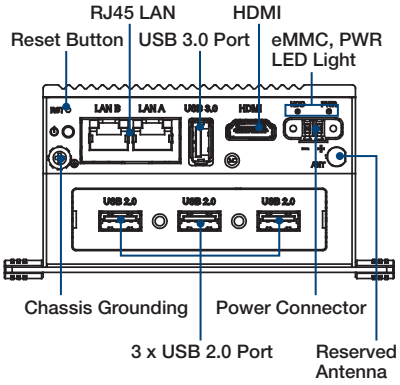
Front I/O View