ESRP-CMS-UNO1372GH

Class I, Division 2 Certified ACP Ready ThinClient

Features

- Verified with ACP ThinManager, ACP BIOS enabled
- 4th Generation Intel® Celeron® J1900 Processor 2.42 GHz with 4GB DDR3L Memory
- UL listed for Hazardous Locations: Class I, Division 2
- Dual Power Input for Avoiding Power Down Time
- 2 x simultaneous, independent multi-monitor video ports: 1 x VGA, 1 x HDMI

Introduction

Realize the true value of thin client and centralized management technologies with Advantech's ThinManager compatible industrial thin clients. ACP's ThinManager, the leading thin client solution for the factory floor, and Advantech's industrially hardened thin client hardware provide a unique solution for centralized management of factory floor applications. ESRP-CMS-UNO1372GH is UL listed for Hazardous Locations with Class I, Division 2, groups A, B, C, D T4A certification and is the perfect ThinManager industrial thin client designed to be safely operated in the hazardous location where the devices are under potential danger from flammable gases, combustible dust, or ignitable fibers, creating the potential for fire and explosions.

Specifications

General

- **Certification** — CE, FCC, UL, CCC, BSMI
  Class I, Division 2, Groups A,B,C,D, Hazardous Location, Temperature code: T4A, Ambient Temperature Range: -20°C - 60°C
- **Dimensions (W x D x H)** — 85 x 139 x 152 mm (3.3" x 5.5" x 6.0")
- **Form Factor** — Small Size
- **Enclosure** — Aluminum Housing
- **Mounting** — DIN-rail, Wallmount
- **Weight (Net)** — 1.6kg (3.5lbs)
- **Power Requirement** — 9~36V_{DC} (Recommend 12/24 V_{DC})
- **Power Consumption** — 24W (Typical), 50W (Max)
- **OS Support** — Microsoft® Windows 7/8, WES7, WIN10 Ent. LTSB, AdvLinux

System Hardware

- **BIOS** — ACP BIOS enabled
- **Watchdog Timer** — Programmable 255 levels timer interval, from 1 to 255 sec
- **Processor** — Intel Atom E3845 1.91GHz, 2MB L2 Cache
- **System Chip** — Integrated Intel SoC Chipset
- **Memory** — Built-in 4GB DDR3L 1333 MHz (Up to 8GB)
- **Graphics Engine** — Intel® HD Graphics
- **Ethernet** — LAN A, B: Intel® i210-IT GbE, 802.1Qav, 802.1AS, 802.3az
  LAN C: Realtek RTL8111E GbE
- **LED Indicators** — LEDs for Power, battery, LAN (Active, Status), COM (Tx/ Rx), HDD and Programmable LED
  1 x mSATA
- **Storage** — One drive bay for SATA 2.5" HDD (Compatible with 9.5mm height HDD)
- **Expansion** — 2 x Full-size mPCIe slot

I/O Interfaces

- **Serial Ports** — 1 x RS-232, DB9, 50~115.2kbps
  1 x RS-422/485, DB9, auto flow control, 50~115.2kbps
- **LAN Ports** — 3 x RJ45, 10/100/1000 Mbps IEEE 802.3u 1000BASE-T Fast Ethernet
- **USB Ports** — 3 x USB Ports (2 x USB2.0, 1 x USB 3.0)
- **Isolated DIO** — 4-ch digital input, 4-ch digital output (2500 V_{DC})
- **Displays** — 1 x VGA, supports 1920 x 1080 @ 60Hz 24bpp
  1 x HDMI 1.4a, supports 1920 x 1080 @ 60Hz 24bpp
- **Audio** — Line-Out
- **Power Connector** — 1 x 4 Pins, Terminal Block to support dual power input

Environment

- **Operating Temperature** — - 20 ~ 60°C (-4 ~ 140°F) @ 5 ~ 85% RH with 0.7m/s airflow (Industry SSD)
- **Storage Temperature** — - 40 ~ 85°C (-40 ~ 185°F)
- **Relative Humidity** — 95% RH @ 40°C, non-condensing
- **Shock Protection** — Operating, IEC 60068-2-27, 50G, half sine, 11ms
- **Vibration Protection** — Operating, IEC 60068-2-64, 5Grms, random, 5 ~ 500Hz, 1 hr/axis
- **Ingress Protection** — IP40

Installation Scenario

DIN-rail mounting illustration

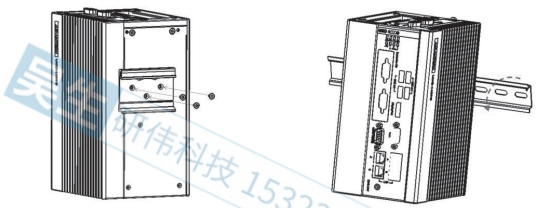

易华 研伟科技 15323776600

Wall mounting illustration

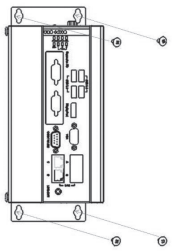

THINMANAGER
A Rockwell Automation Technology

All product specifications are subject to change without notice.

Last updated: 4-May-2021

Dimensions

Unit: mm

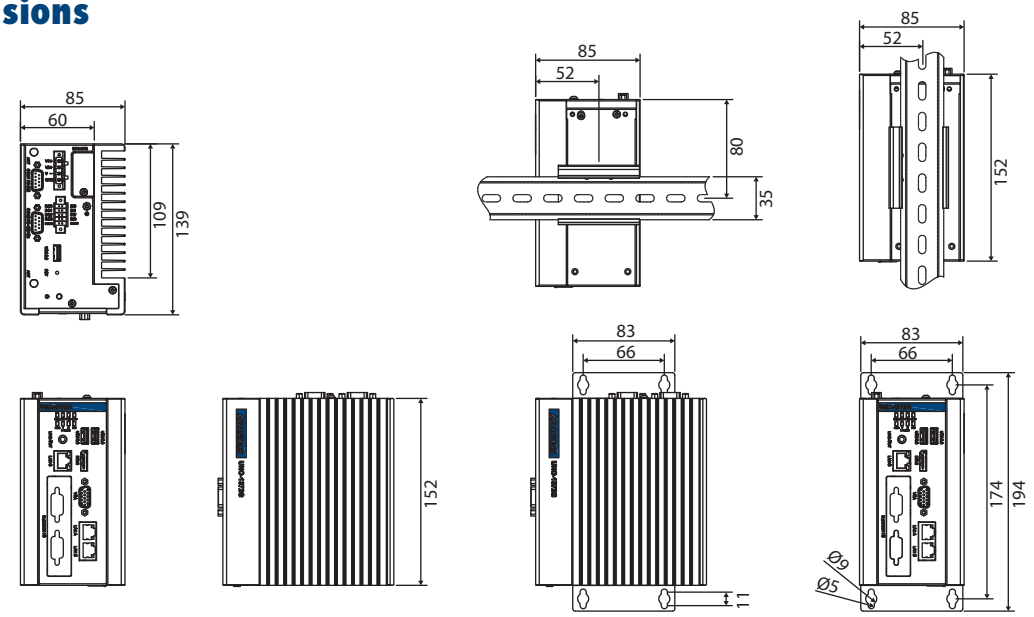

Front I/O View

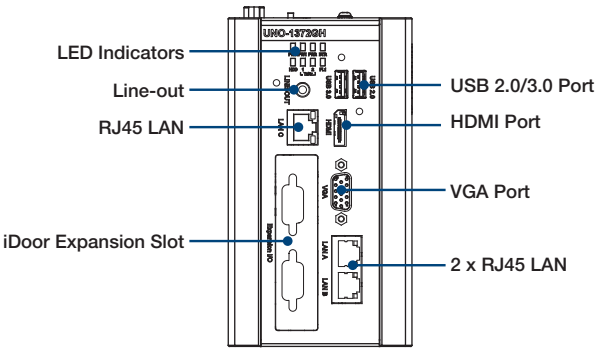

Top I/O View

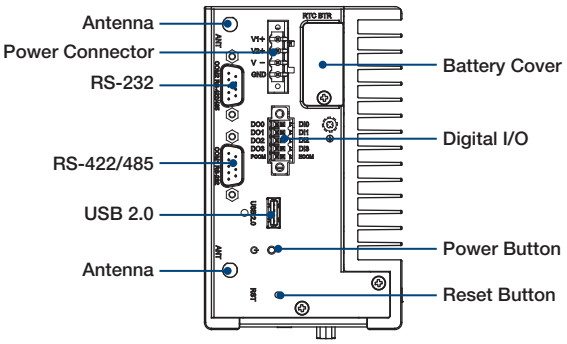

Ordering Information

- **ESRP-CMS-UNO1372GH** UNO-1372GH, ACP Ready ThinClient, VGA x 1, HDMI x 1

iDoor Modules

- **PCM-23C1CF-BE** 1 CFast Slot with Cover Protection
- **PCM-23U1DG-BE** USB Slot w/ Lock for USB Dongle
- **PCM-24R2GL-AE** 2-Port Gigabit Ethernet, mPCIe, RJ45
- **PCM-24U2U3-AE** 2-Port USB 3.0, mPCIe, USB-A type
- **PCM-24D2R4-BE** 2-Port Isolated RS-422/485 mPCIe, DB9
- **PCM-24D4R4-BE** 4-Port Non-Isolated RS-422/485 mPCIe, DB37
- **PCM-24S2WF-BE** WiFi 802.11 ac/a/b/g/n 2T2R w/Bluetooth 4.1
- **PCM-24S33G-AE** Wide-Temp 3.75G HSPA and GPS, 2-in-1, Full-size mPCIe w/ Redundant SIM Card holder, 2-port SMA
- **PCM-26R2PN-MAE** 2-Port Hilscher netX100 FieldBus mPCIe, PROFINET, RJ45, Master
- **PCM-26R2PN-SAE** 2-Port Hilscher netX100 FieldBus mPCIe, PROFINET, RJ45, Slave
- **PCM-26D1DB-MAE** 1-Port Hilscher netX100 FieldBus mPCIe, PROFIBUS, DB9, Master
- **PCM-26D1DB-SAE** 1-Port Hilscher netX100 FieldBus mPCIe, PROFIBUS, DB9, Slave

Optional Accessories

- **PWR-247-CE** ADP A/D 100-240V 60W 24V (Commercial Grade)
- **1702002600** Power Cable US Plug 1.8 M (Industrial Grade)
- **1702002605** Power Cable EU Plug 1.8 M (Industrial Grade)
- **1702031801** Power Cable UK Plug 1.8 M (Industrial Grade)
- **1700000596** Power Cable China/Australia Plug 1.8 M (Industrial Grade)
- **UNO-IPS2460-AE** 24 V_{DC}/ 60 Watts DIN-Rail Power Supply

Embedded O/S

- **2070014956** Image Win10 Enterprise 2016 LTSB X64 MUI for UNO-1372G
- **2070014549** Image AdvLinuxTU for UNO-1372G
- **2070014098** Image WEC7 MUI for UNO-1372G
- **20703WE7PS0010** Img WS7P X64 MUI V4.18 B024 for UNO-1372G
- **20703WE7PS0011** Img WS7P X86 MUI V4.18 B021 for UNO-1372G