ESRP-CMS-IPPC5211S

21.5" Industrial Touch Panel ACP Ready ThinClient with IP69K Complete Stainless Steel Housing

Features

- Verified with ACP ThinManager, ACP BIOS enabled
- Complete stainless steel housing with IP69K waterproof rating
- 4th Generation Intel® Celeron® J1900 processor 2.42 GHz with 4GB DDR3L Memory
- 21.5" full HD TFT LED LCD display
- 16:9 wide screen with PCT touch
- True flat front panel design with 7H glass
- Two independent LANs support Ethernet redundancy allowing the terminal to activate and switch to the backup port in a seamless fashion

Introduction

Realize the true value of thin client and centralized management technologies with Advantech's ThinManager compatible industrial thin clients. ACP's ThinManager, the leading thin client solution for the factory floor, and Advantech's industrially hardened thin client hardware provide a unique solution for centralized management of factory floor applications. The ESRP-CMS-IPPC5211S is the perfect ThinManager 21.5" wide screen industrial panel thin client for applications where flexibility and reliability of PCT touch panel and IP69K rated complete stainless steel housing are desired.

Specifications

General

- **Certification** IP69k, CE, FCC Class A, UL, CCC, BSMI
- **Dimensions (W x H x D)** 555 x 346.5 x 81 (21.85" x 13.64" x 3.19")
- **Enclosure** Front: Stainless steel
Back: Stainless steel
- **Mounting** VESA and flange adapter for arm and foot system
- **Power Consumption** 40.8 W
- **Power Input** 21~27 V_{DC}
- **Weight** 15.8 Kg

System Hardware

- **BIOS** ACP BIOS enabled
- **CPU** 4th Generation Intel® Celeron® J1900 Processor 2.42 GHz
- **Memory** 4 GB DDR3L SO-DIMM
- **Ethernet** RTL8111E-VL-CG
- **I/O Interface** 2 x 10/100/1000 Mbps RJ45
1 x RS-232
1 x RS-232/RS-485/RS-422
1 x USB 2.0, 1 x USB 3.0

LCD

- **Display Type** Full HD TFT LED LCD
- **Display Size** 21.5"
- **Max. Resolution** 1920 x 1080
- **Max. Colors** 16.7M
- **Luminance (cd/m²)** 300
- **Viewing Angle(H/V)** 178 / 178
- **Backlight Life** 50,000 hrs

Touchscreen

- **Light Transmission** ≧88%
- **Resolution** 4096 x 4096 dpi
- **Type** Projected capacitive

Environment

- **Humidity** 10 ~ 95% RH @ 40°C, non-condensing
Note: Tested for 48 hrs
- **Operating Temperature** 0 ~ 50°C (32 ~ 122°F)
- **Storage Temperature** -20 ~ 60°C (-4 ~ 140°F)
- **Vibration Protection** Operating, 1 Grms, random, 5~500Hz

Installation Scenario

Arm System **Foot System**

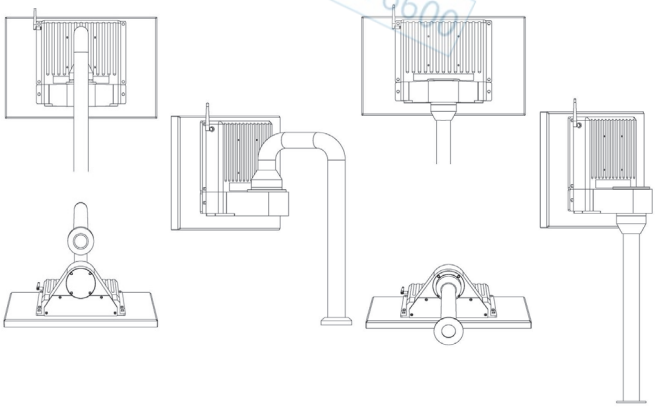

THINMANAGER
A Rockwell Automation Technology

All product specifications are subject to change without notice.

Dimensions

Unit: mm [inch]

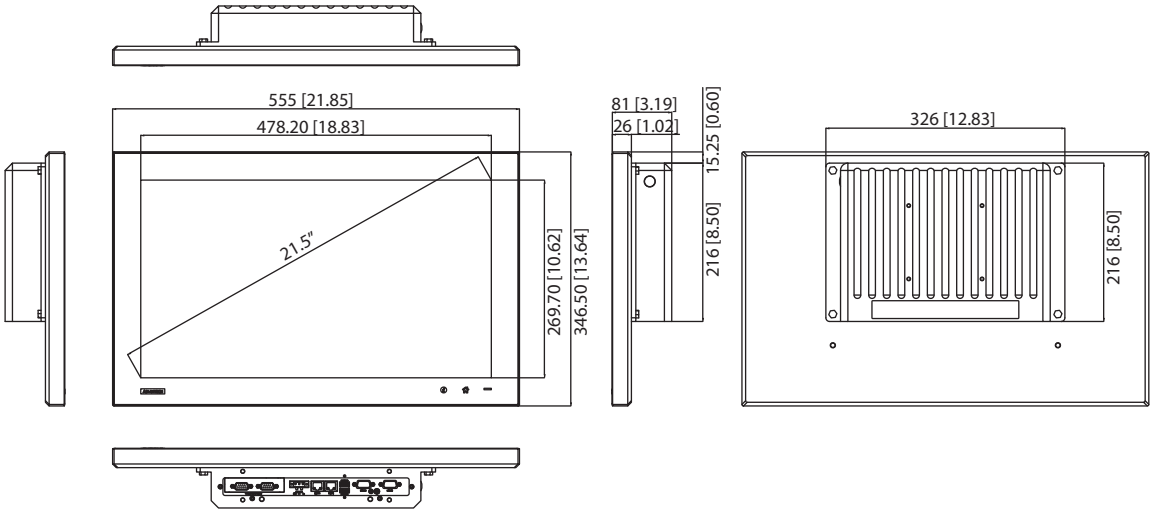

Ordering Information

- **ESRP-CMS-IPPC5211S** IPPC-5211WS-J3AE, ACP Ready ThinClient, 21" Stainless Full HD Wide Touch Screen

Optional Accessories

- **96PSA-A60W24T2** A/D Power adapter 100-240V 60W 24V
- **IPPC-5000-FLAE** Stainless steel flange adapter for connecting the front panel with the arm or foot system and IP69K protection in read side

Rear View

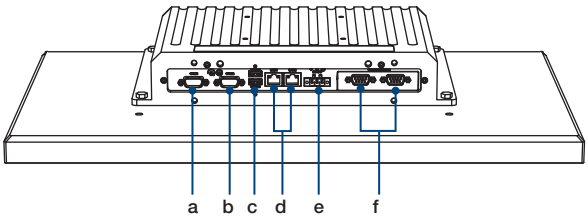

a. COM1 (RS-232)
b. COM2 (RS232/RS485/RS422)
c. 2 x USB (USB 1 x 3.0, 1 x 2.0)
d. 2 x LAN (10/100/1000 Mbps)
e. Power Inlet
f. iDoor
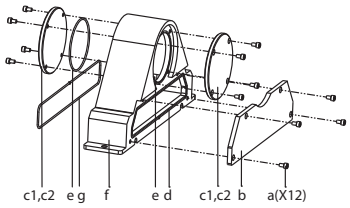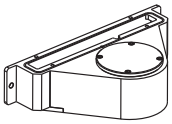
IPPC-5000-FLAE