Industrial Modbus Ethernet to Serial Gateways - copper

Models BB-MESR901, BB-MESR902T

ADVANTECH

www.advantech.com

Model BB-MESR901

FEATURES

- Bridge Modbus TCP Ethernet and RS-232/422/485 networks
- Modbus TCP, ASCII, RTU (up to 16 masters & 32 slaves)
- Data rate: up to 230.4 kbps
- -40 to +80 °C wide operating temperature range
- IP30 case, DIN rail mount, (panel mount option)
- 10-48 VDC input required (power supply not included, sold separately)
- UL Class 1/Division 2

MESR900 series Copper Modbus Gateways bridge devices on Modbus serial networks (RS-232, RS-422 or RS-485) with those on Modbus TCP networks allowing seamless integration. Serial ports can be accessed over a LAN or WAN using Direct IP Mode connections.

Supporting up to 16 masters and 32 slaves, these gateways feature auto-detecting 10/100 copper options. Serial data rates up to 230 kbps ensure maximum network flexibility.

MESR900 series Copper Modbus Gateways are built for use in industrial environments, featuring a slim IP30 DIN rail mountable case.

They operate from a range of DC power supply voltages and have pluggable terminal block connectors. An external power supply, sold separately, is required. Easy-to-use software is designed for Windows 2000, 2003 Server, XP, Vista, 2008 Server, 7, 8, 10.

ORDERING INFORMATION

MODEL NUMBER	SERIAL PORTS	SERIAL CONNECTOR	ETHERNET PORT	ETHERNET CONNECTOR
BB-MESR901	1	DB9 or Terminal Block	(1) Copper	RJ45
BB-MESR902T	2	Terminal Block	(1) Copper	RJ45

ACCESSORIES – sold separately

BB-MDR-20-24 - 24VDC, 1.0 A output power, DIN rail mount power supply

BB-MDR-40-24 - 24VDC, 1.7 A output power, DIN rail mount power supply

BB-TBKT1 - Replacement Terminal Block - 2-position, 5.08mm, 8A, 30

BB-TBKT2 - Replacement Terminal Block - 5-position, 5.08mm, 8A, 30

All product specifications are subject to change without notice.
BB-MESR9xx Copper Series_0920ds

Industrial Modbus Ethernet to Serial Gateways - copper

Models BB-MESR901, BB-MESR902T

Model BB-MESR902T

SPECIFICATIONS

SERIAL TECHNOLOGY	
RS-232	TD, RD, RTS, CTS, DTR, DCR, DTD, GND
RS-485 2-Wire	Data A(-), Data B(+), GND
RS-422/485 4-Wire	TDA(-), TDB(+), RDA(-), RDB(+), GND
Serial Connector/s	DB9M or Removable Terminal Blocks; 12 to 28 AWG
Data Rate	Up to 230.4 Kbps
POWER	
Source	External, required (not included, sold separately)
Input Voltage	10 to 48 VDC (58 VDC, maximum)
Connector	Removable Terminal Block (12 to 28 AWG)
POWER CONSUMPTION	
BB-MESR90X	4.0 Watts
MECHANICAL	
LED Indicators	Serial Port, Ethernet Link, Ready
Switches	Reset Button
Dimensions	11.94 x 8.03 x 2.96 cm
Weight	149.7 gm
ENVIRONMENTAL	
Operating Temperature	-40 to +80 °C
Operating Humidity	0 to 95%, non-condensing
MEANTIME BETWEEN FAILURES (MTBF)	
MTBF	~132309 hours
MTBF Calc Method	Parts Count Reliability Prediction
NETWORK	
Serial Memory	8 KB per port
Network Memory	4 KB
LAN	10/100 Mbps, auto-detecting
Ethernet	IEEE 802.3 auto-detecting & auto MDI/MDX 10/100

PROTOCOLS	
Protocols	TCP, IPv4, ARP, HTTP 1.0, ICMP/PING, DHCP/BOOTP
IP Mode	Static, DHCP
TCP	User definable
OTHER	
Mode	Modbus RTU Master / Slave Modbus ASCII Master / Slave
Search	Serial direct COM and Ethernet Auto Search or specific IP
Diagnostics	Display PC IP, ping, test VCOM, save test config. (text readable)
Firmware Upgrade	via Vlinx Manager
ETHERNET PASS-THROUGH PORT (MESR92X)	
Standards	IEEE 802.3, 802.3u, 802.3x
Processing Type	Store & Forward with 802.3x full duplex, non-blocking flow control
Flow Control	IEEE 802.3x flow control, back pressure flow control
MAC Address Table	2K
CONFIGURATION SOFTWARE	
Vlinx Manager - Windows O/S	2000, XP, 2003 Server, Vista, 2008 Server, 7, 8, 10 (32/64 bit)
APPROVALS / DIRECTIVES/ STANDARDS	
Compliance	FCC, CE
UL	UL Listed UL Class 1/Division 2, Groups A, B, C, D (HAZLOC)
CE - Directives	2014/30/EU - Electromagnetic Compatibility (EMC) 2011/65/EU amended by (EU) 2015/863 Reduction of Hazardous Substances Directive (RoHS) 2012/19/EU - Waste Electrical and Electronic Equipment (WEEE)
CE - Standards	EN 55032 Class B - Electromagnetic Compatibility of Multimedia Equipment - Emission Requirements EN 55024 - Information Technology Equipment - Immunity Characteristics - Limits and Methods of Measurement (ITE)

MECHANICAL DIAGRAM - BB-MESR901
Units = cm / in

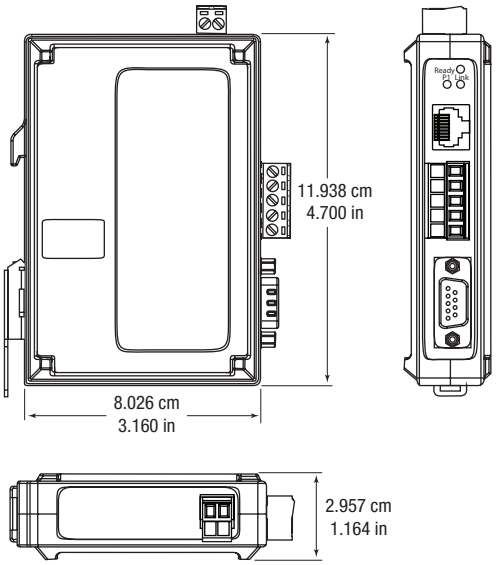
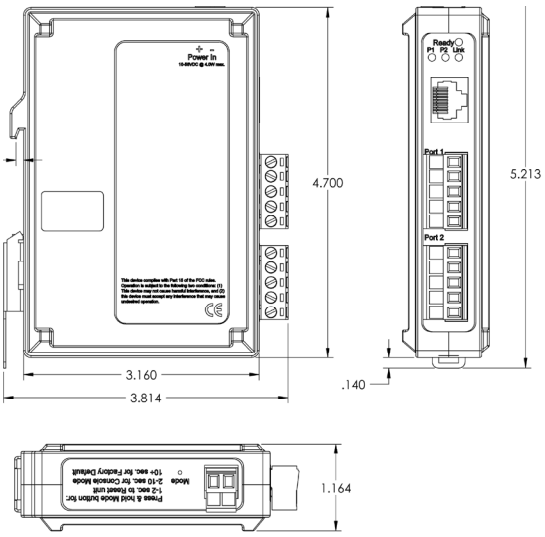
MECHANICAL DIAGRAM - BB-MESR902T
Units = in