UNO-410

Explosion-Proof DIN-Rail Gateway with C1D2/ATEX/IECEx Certification

Features

- Intel® Atom® E3940 processor (1.6 GHz) with 8 GB DDR3L memory
- Wide power input range (10 ~ 36 VDC)
- 8 x DI, 8 x DO, and 2 x COM with port isolation
- DP++ for HDMI/DVI compatibility
- Dual storage with M.2 2242 SATA SSD and 2.5" HDD/SSD
- Onboard TPM 2.0 provides hardware-based security
- Supports M.2 3042/3052 module
- Ruggedized DIN-rail mount kit
- Compliant with IEC 61010-1 safety specifications
- Explosion protection with UL C1D2/ATEX Zone 2/IECEx Zone 2 certified

Introduction

UNO-410 is an industrial-grade automation computer equipped with an Intel® Atom® E3940 processor, 8 GB DDR3L memory, and support for DIN-rail mounting to ensure convenient installation. The system I/O includes 2 x GbE, 4 x USB, 2 x COM, 2 x DP 1.2 ,8 x DI, and 8 x DO (all of which can be locked to prevent sparks/fire) as well as 1 x standard M.2 3052/3042 sockets and 1 x mPCIE slot that offers expandable wireless connectivity. Designed for safe operation in hazardous locations, UNO-410 is UL C1D2/ATEX Zone 2 /IECEx Zone 2 certified. This ensures explosion/fire protection in the event of exposure to flammable gases, liquids, or vapors.

Specifications

General

- **Certification** — CE; FCC; CCC; UL 61010-2-201; Class I, Division 2, Groups A, B, C, D ATEX/IECEx Zone 2
- **Dimensions (W x D x H)** — 70 x 105 x 150 mm/2.8 x 4.1 x 5.9 in
- **Form Factor** — Small
- **Enclosure** — Aluminum housing
- **Mount Options** — DIN rail
- **Weight (Net)** — 1 kg/2.2 lb
- **Power Requirement** — 10 ~ 36 V_{DC}
- **Power Consumption** — 21W (typical), 47W (max.)
- **OS Support** — Win 10 2019 LTSC, AdvLinux (Ubuntu 18.04)

System Hardware

- **BIOS** — AMI UEFI (128 Mbit)
- **Watchdog Timer** — Programmable timer with 255 intervals (1 ~ 255 sec)
- **Hardware Security** — TPM2.0
- **Processor** — Intel® Atom® E3940, 1.6 GHz (up to 1.8 GHz)
- **Memory** — 8 GB DDR3L, 1600 MHz (Up to 8 GB)
- **Graphics Engine** — Intel® HD Graphics
- **Ethernet** — Intel® i210-IT GbE, IIEEE802.1AS, 802.3az
- **LED Indicators** — 1 x Programmable LED, 1 x power LED, 1 x RTC battery LED, and LAN (active, status)
- **Storage/Expansion** — 1 x 2.5"SSD SATA connector (1 x 2.5" 64G SATA SSD is default in UNO-410-E1HX)
  1 x M.2 (B-key) (SATA,USB 3.0 signal) for 2242 SATA SSD or 3042/3052 cellular module
  1 x Full-size mPCIe (PCIe/USB signal),
  1 x Nano SIM card slot

I/O

- **Isolated Serial Ports** — 2 x RS-232/422/485 (terminal block)
  50 bps ~115.2 kbps (2500 V_{DC} isolation protection)
- **LAN** — 2 x 10/100/1000 Mbps IEEE 802.3u 1000 BASE-T Fast Ethernet (RJ45)
- **USB** — 3 x USB 3.2 Gen 1, 1 x USB 2.0 (Type A)
- **Isolated DI/O** — 8 x Digital input channels with 2500 V_{DC} isolation protection
  - Wet contact: Logic 0: 10 ~ 30 V_{DC}/ Logic 1: 0 ~ 3 V_{DC}
  - Dry contact: Logic 0: Shorted to GND/ Logic 1: Open

  8 x Digital output channels
  - Output voltage: 5 ~ 30 V_{DC}
- **Displays** — 2 x DP 1.2, up to 4096 x 2306 @ 60 Hz
- **Power Connector** — 1 x 2-pin terminal block

Environment

- **Operating Temperature** — Conditions without airflow:
  -40 ~ 55 °C/-40 ~ 131 °F with wide-temperature (-40 ~ 85 °C/-40 ~ 185 °F) SSD and WiFi module.
  -40 ~ 40 °C/-40 ~ 104 °F with LTE module.
  Conditions with 0.7m/s airflow:
  -40 ~ 70 °C/-40 ~ 158 °F with wide-temperature 2.5"SSD, WiFi, LTE modules.
  -40 ~ 60 °C/-40 ~ 140 °F with wide-temperature M.2 SSD.
- **Storage Temperature** — - 40 ~ 85 °C/-40 ~ 185 °F
- **Relative Humidity** — 95% RH @ 40 °C/104 °F, non-condensing
- **Shock Protection** — Operating, IEC 60068-2-27, 50G, half sine, 11ms
- **Vibration Protection** — Operating, IEC 60068-2-64, 4 Grms, random, 5 ~ 500 Hz, 1hr/axis (SSD)
- **Ingress Protection** — IP40

吴生 研伟科技 15323776600

Installation Scenario

DIN-rail mounting

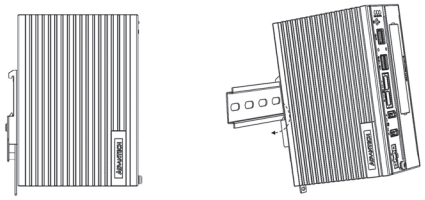

Dimensions

Unit: mm

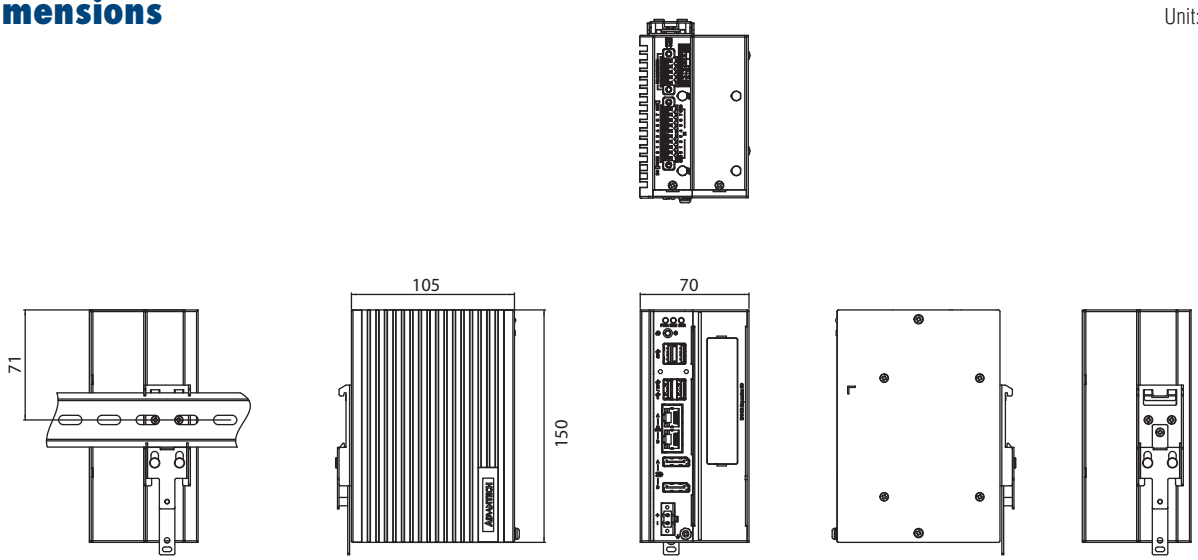

Front I/O

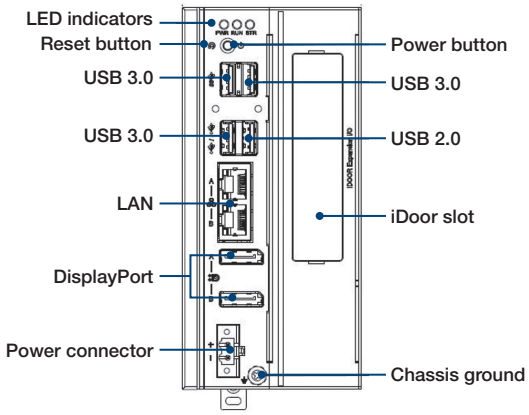

Top I/O

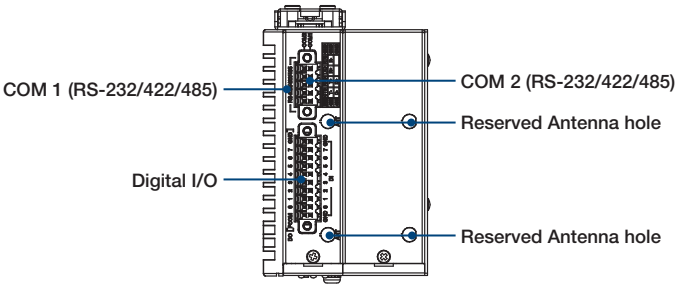

Ordering Information

Part number	Description	Certification
UNO-410-E1H	Intel® Atom™ E3940, 1.6 GHz, 8 GB DDR3L, 2 x LAN, 2 x COM, 4 x USB, 8 x DI/O, 1 x iDoor	UL C1D2
UNO-410-E1HX	Intel® Atom™ E3940, 1.6 GHz, 8 GB DDR3L, 2 x LAN, 2 x COM, 4 x USB, 8 x DI/O, 1 x iDoor, 64G 2.5" SSD	UL C1D2, ATEX/IECEx Zone 2

Embedded OS

- **20703WX9ES0045** Img WIN10LTSC x64 v6.06 B010 UNO-137/410 Entry
- **20703LEB1S0105** Image AdvLinuxTu V2.1.2 for UNO/TPC/WISE

Optional Accessories

M.2 2242 SATA SSD

- **SQF-SM4M2-64G-SBE** 64 GB M.2 SSD, SQFlash 640, SATA III (-40 ~ 85 °C/-40 ~ 185 °F)
- **SQF-SM4M2-128G-SBE** 128 GB M.2 SSD, SQFlash 640, SATA III (-40 ~ 85 °C/-40 ~ 185 °F)
- **SQF-SM4M2-256G-SBE** 256 GB M.2 SSD, SQFlash 640, SATA III (-40 ~ 85 °C/-40 ~ 185 °F)

2.5" SATA SSD

- **SQF-S25M4-64G-SBE** 64 GB, 2.5" MLC SSD, SQFlash 640 (-40 ~ 85 °C/-40 ~ 185 °F)
- **SQF-S25M4-128G-SBE** 128 GB, 2.5" MLC SSD, SQFlash 640 (-40 ~ 85 °C/-40 ~ 185 °F)
- **SQF-S25M4-256G-SBE** 256 GB, 2.5" MLC SSD, SQFlash 640 (-40 ~ 85 °C/-40 ~ 185 °F)
- **SQF-S25M4-512G-SBE** 512 GB, 2.5" MLC SSD, SQFlash 640 (-40 ~ 85 °C/-40 ~ 185 °F)

Wi-Fi

- **EWM-W190H02E** mPCIe module (802.11 a/b/g/n/ac with BT4.2) (-40 ~ 85 °C/-40 ~ 185 °F)
- **1750008798-01** Cable antenna SMA/F-R-BH MHF1/113 black L250
- **1750002842** Wireless antenna R-AN2450-5701RS R/P SMA.M 10.9 cm
- **PCM-24S2WF-BE** iDoor module (802.11 a/b/g/n/ac w/BT4.1) (-20 ~ 65 °C/-4 ~ 149 °F)

LTE

- **968AD00426** Sierra EM7565 LTE Cat-12 M.2 module (global band)
- **968AD00590** Quectel EM06-E LTE Cat-6 M.2 module (EMEA/Brazil/APAC)
- **1750008862-01** Cable Ant.SMA/F-BH MHF4/113 BLK L250 LTE
- **1750008303-01** Antenna AN0727-64SP6BSM

AT&T/Verizon-Certified LTE Kit for North America

- **C-PCM-24S24G-4AV-1** MultiTECH iDOOR, LTE Cat 4 (AT&T/Verizon)
- **9893UH09000** MutilTECH Riser Card_M.2 B-key

Please note: If some optional modules are offered with the system, additional system certificates may be required in certain regions/countries.
Please contact Advantech for certificate compliance.