UNO-1372GH

Class I, Division 2 Certified Intel® Atom™ Quad-Core Control DIN-rail PC

Features

- UL listed for hazardous locations: Class I, Division 2
- Intel® Atom E3845 1.91GHz processor with 4GB DDR3L memory
- 3 x GbE, 3 x USB, 2 x COM, 1 x VGA, 1 x HDMI, audio, iDoor, mSATA, 2 x mPCIe, 1 x SATA, 4 x DI, 4 x DO, 1 x power terminal
- Spark-free design with lockable I/O kit
- Dual power input for avoiding power down time
- Exchangeable RTC battery with easy access on the top
- Digital I/O with isolation protection for sensing and controlling
- Diverse system IO and supports fieldbus protocol by idoor technology as a protocol gateway
- 3G/GPS/GPRS/Wi-Fi communication by idoor technology as a communication gateway
- Supports MRAM by iDoor technology
- LAN redundancy (teaming)

Introduction

In hazardous locations, devices are under potential danger from flammable gases, combustible dust, or ignitable fibers, creating the potential for fire and explosions. The UNO-1372GH is designed to be safely operated in these locations and are UL listed for Hazardous Locations with Class I, Division 2, groups A, B, C, D T4A certification. The UNO-1372GH is an Intel Atom DIN-rail PC which features an innovative iDOOR Technology for automation applications. It provides rich I/O include 3 x GbE, 3 x USB, 2 x COM, 1 x VGA, 1 x HDMI, Audio, iDoor,8 x DIO, all of them can be locked to make sure they are spark-free in harsh environments.

Specifications

General

Certification	CE, FCC, UL, CCC, BSMI Class I, Division 2, Groups A,B,C,D, Hazardous Location, Temperature code: T4A, Ambient Temperature Range: -20°C - 60°C
Dimensions (W x D x H)	85 x 139 x 152 mm (3.3" x 5.5" x 6.0")
Form Factor	Small Size
Enclosure	Aluminum Housing
Mounting	DIN-rail, Wallmount
Weight (Net)	1.6kg (3.5lbs)
Power Requirement	10~36V_{DC} (Recommend 12/24 V_{DC})
Power Consumption	24W (Typical), 50W (Max)
OS Support	Microsoft® Windows 7/8, WES7, WIN10 Ent. LTSB, AdvLinux

System Hardware

BIOS	AMI UEFI 128Mbit Flash BIOS
Watchdog Timer	Programmable 255 levels timer interval, from 1 to 255 sec
Processor	Intel Atom E3845 1.91GHz, 2MB L2 Cache
System Chip	Integrated Intel SoC Chipset
Memory	Built-in 4GB DDR3L 1333 MHz (Up to 8GB)
Graphics Engine	Intel® HD Graphics
Ethernet	LAN A, B: Intel® i210-IT GbE, 802.1Qav, 802.1AS, 802.3az LAN C: Realtek RTL8111E GbE
LED Indicators	LEDs for Power, battery, LAN (Active, Status), COM (Tx/ Rx), HDD and Programmable LED 1 x mSATA
Storage	One drive bay for SATA 2.5" HDD (Compatible with 9.5mm height HDD)
Expansion	2 x Full-size mPCIe slot

I/O Interfaces

Serial Ports	1 x RS-232, DB9, 50bps~115.2kbps 1 x RS-422/485, DB9, auto flow control, 50bps~115.2kbps
LAN Ports	3 x RJ45, 10/100/1000 Mbps IEEE 802.3u 1000BASE-T Fast Ethernet
USB Ports	3 x USB Ports (2 x USB2.0, 1 x USB 3.0)
Isolated DIO	4-ch digital input, 4-ch digital output (2500 V_{DC})
Displays	1 x VGA, supports 1920 x 1080 @ 60Hz 24bpp 1 x HDMI 1.4a, supports 1920 x 1080 @ 60Hz 24bpp
Audio	Line-Out
Power Connector	1 x 4 Pins, Terminal Block to support dual power input

Environment

Operating Temperature	- 20 ~ 60°C (-4 ~ 140°F) @ 5 ~ 85% RH with 0.7m/s airflow (Industry SSD)
Storage Temperature	- 40 ~ 85°C (-40 ~ 185°F)
Relative Humidity	95% RH @ 40°C, non-condensing
Shock Protection	Operating, IEC 60068-2-27, 50G, half sine, 11ms
Vibration Protection	Operating, IEC 60068-2-64, 5Grms, random, 5 ~ 500Hz, 1 hr/axis
Ingress Protection	IP40

Installation Scenario

DIN-rail mounting illustration

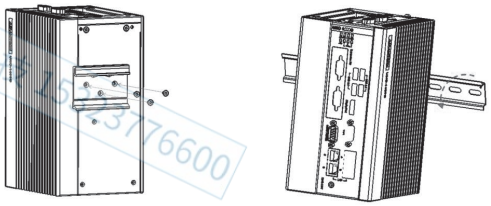

Wall mounting illustration

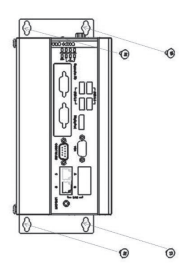

昊生 研伟科技 15923776600

All product specifications are subject to change without notice.

Dimensions

Unit: mm

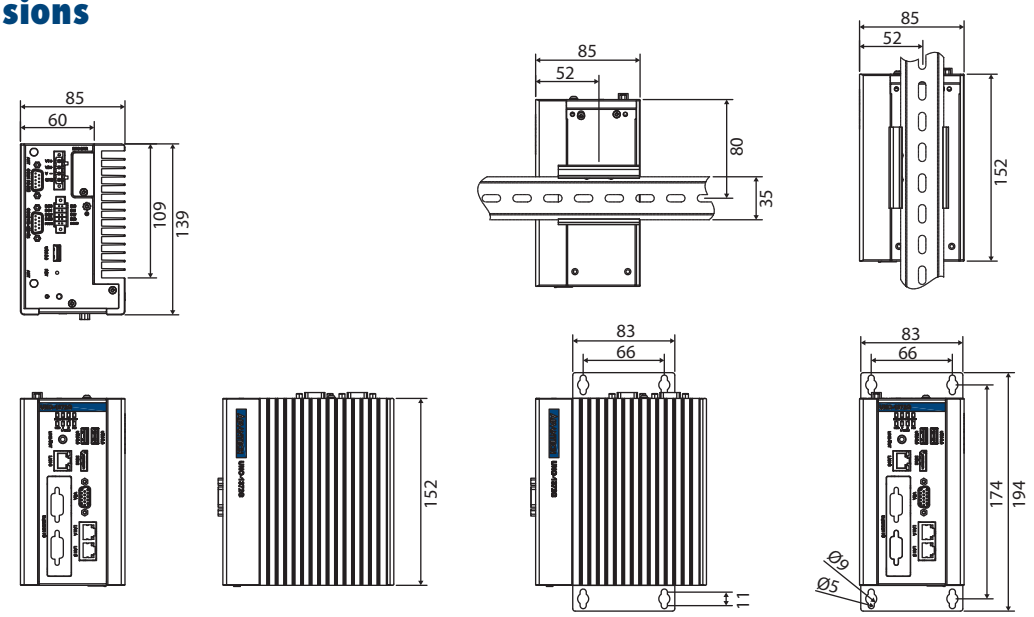

Front I/O View

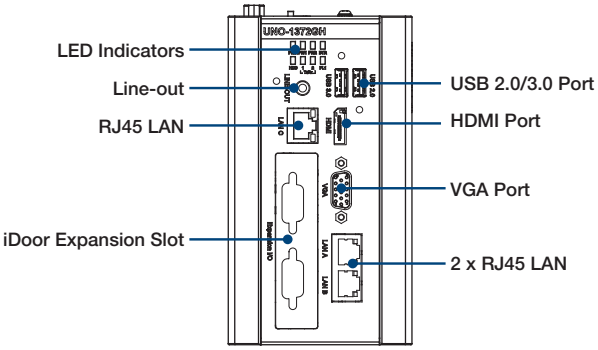

Top I/O View

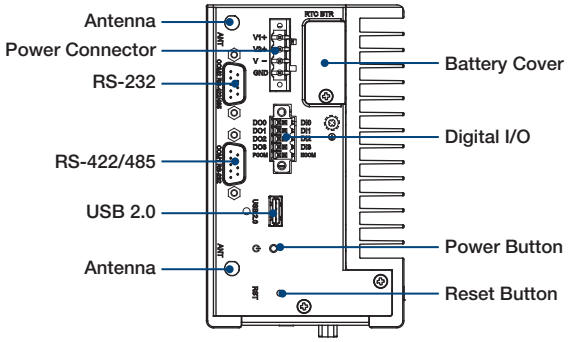

Ordering Information

- **UNO-1372GH-E3AE** Class I, Division 2 Certified Intel Atom Quad-Core 1.91GHz, 4GB, 3 x LAN, 2 mPCIe, iDoor

iDoor Modules

- **PCM-23C1CF-BE** 1 CFast Slot with Cover Protection
- **PCM-23U1DG-BE** USB Slot w/ Lock for USB Dongle
- **PCM-24R2GL-AE** 2-Port Gigabit Ethernet, mPCIe, RJ45
- **PCM-24U2U3-AE** 2-Port USB 3.0, mPCIe, USB-A type
- **PCM-24D2R4-BE** 2-Port Isolated RS-422/485 mPCIe, DB9
- **PCM-24D4R4-BE** 4-Port Non-Isolated RS-422/485 mPCIe, DB37
- **PCM-24S2WF-BE** WiFi 802.11 ac/a/b/g/n 2T2R w/Bluetooth 4.1
- **PCM-24S33G-AE** Wide-Temp 3.75G HSPA and GPS, 2-in-1, Full-size mPCIe w/ Redundant SIM Card holder, 2-port SMA
- **PCM-26R2PN-MAE** 2-Port Hilscher netX100 FieldBus mPCIe, PROFINET, RJ45, Master
- **PCM-26R2PN-SAE** 2-Port Hilscher netX100 FieldBus mPCIe, PROFINET, RJ45, Slave
- **PCM-26D1DB-MAE** 1-Port Hilscher netX100 FieldBus mPCIe, PROFIBUS, DB9, Master
- **PCM-26D1DB-SAE** 1-Port Hilscher netX100 FieldBus mPCIe, PROFIBUS, DB9, Slave

Optional Accessories

- **PWR-247-DE** 100-240V 60W 24V 2.5A Power Supply
- **1702002600** Power Cable US Plug 1.8 M (Industrial Grade)
- **1702002605** Power Cable EU Plug 1.8 M (Industrial Grade)
- **1702031801** Power Cable UK Plug 1.8 M (Industrial Grade)
- **1700000596** Power Cable China/Australia Plug 1.8 M (Industrial Grade)
- **UNO-IPS2460-AE** 24 V_{DC}/ 60 Watts DIN-Rail Power Supply

Embedded O/S

- **20703WX9ES0026** Img W10LTSC x64 V6.05 B021 UNO-1372G-ExAE Entry
- **20703LEB1S0091** Image AdvLinuxTu V2.0.6 for UNO/TPC series
- **20703WC70S0037** Img WEC7 MUI V4.02 B117 for UNO-1372G
- **20703WE7PS0010** Img WS7P X64 MUI V4.18 B024 for UNO-1372G
- **20703WE7PS0011** Img WS7P X86 MUI V4.18 B021 for UNO-1372G

Please note: If some optional modules are offered with the system, additional system certificates may be required in certain regions/countries.
Please contact Advantech for certificate compliance.