# ROM-7420

## NXP ARM® Cortex®-A9 i.MX6 Qseven Module

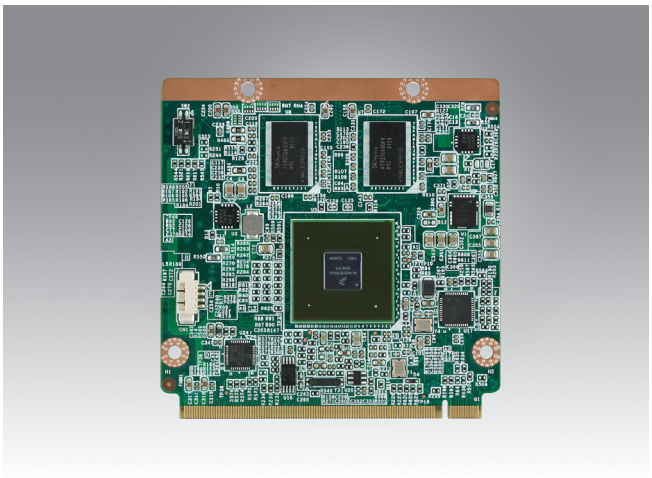

## Features

- NXP ARM® Cortex®-A9 i.MX6 Dual / Quad 1 GHz high performance processor
- Onboard DDR3 memory 1 GB and eMMC Flash 4 GB
- HDMI, VGA, LVDS, up to 4 displays
- Compact in size 70 x 70mm
- Rich I/O with 2 CAN, 4 UART, Giga LAN, PCIe and SATA
- Low power consumption, fanless design
- Supports Linux and Android BSP

## Introduction

ROM-7420 Qseven Module integrates an ARM Cortex-A9 NXP i.MX6 series ultra low power SoC and I/O solution chips with Linux. NXP i.MX6 supports 2D, 3D graphics acceleration, full HD 1080P video decoding and an HD 1080p video encoding hardware engine.

ROM-7420 offers an Advantech ROM-DB7500 Evaluation Carrier Board for easy integration and design reference; we also offer schematics and layout checklists for carrier board development. Additionally, Linux BSP, test utilities, HW design utilities, and reference codes are ready for application development and device integration.

## Specifications

| | | |
|---|---|---|
| Form Factor | | Qseven 1.2 |
| Processor System | CPU | NXP ARM Cortex-A9 i.MX6 1 GHz |
| Memory | Technology | DDR3 1066 MHz |
| | Capacity | On-board DDR3 1 GB |
| | Flash | 4 GB eMMC NAND Flash for O.S. and 4 MB SPI NOR Flash for Advantech boot loader |
| Graphics | LVDS | 2 24-bit LVDS, 1366 x 768 for 1ch; 1920 x 1080 for 2ch |
| | HDMI | 1920 x 1080 at 60Hz |
| | Parallel RGB | - |
| | VGA | 1920 x 1080 at 60Hz |
| | Graphics Engine | 2 IPUs. OpenGL ES 2.0 for 3D, BitBlt for 2D and OpenVG 1.1 |
| | H/W Video Codec | Decoder: MPEG-4 ASP, H.264 HP, H.263, MPEG-2 MP, MJPEG BP<br>Encoder: MPEG-4 SP, H.264 BP, H.263, MJPEG BP |
| Ethernet | Chipset | NXP i.MX6 integrated RGMII |
| | Speed | 1 x 10/100/1000 Mbps |
| RTC | RTC | Yes |
| WatchDog Timer | | 256-level timer interval, from 0 ~ 128 sec |
| I/O | PCIe | 1 PCIe x 1 |
| | SATA | 1 SATA II |
| | USB | 1 USB 2.0, 1 USB 2.0 OTG |
| | Audio | $I^2S$ |
| | SPDIF | - |
| | SDIO | 1 |
| | Serial Port | 4 UART (4 x 2 wire, w/ 3.3V) |
| | SPI | 1 |
| | CAN | 2 x CAN bus 2.0B |
| | GPIO | 8 |
| | $I^2C$ | 3 |
| | Camera Input | - |
| | System Bus | - |
| | Touch | - |
| | Keypad | - |
| Power | Power Supply Voltage | +5 V |
| | Power Consumption | 3.16W (Max) |
| Environment | Operating Temperature | 0 ~ 60 °C |
| | Operating Humidity | 0% ~ 90% relative humidity, non-condensing |
| Mechanical | Dimensions (W x D) | 70 x 70 mm |
| Operation System | | Linux & Android |
| Certifications | | CE/FCC Class B |

吴生 研伟科技 15323776600

## Board Diagram

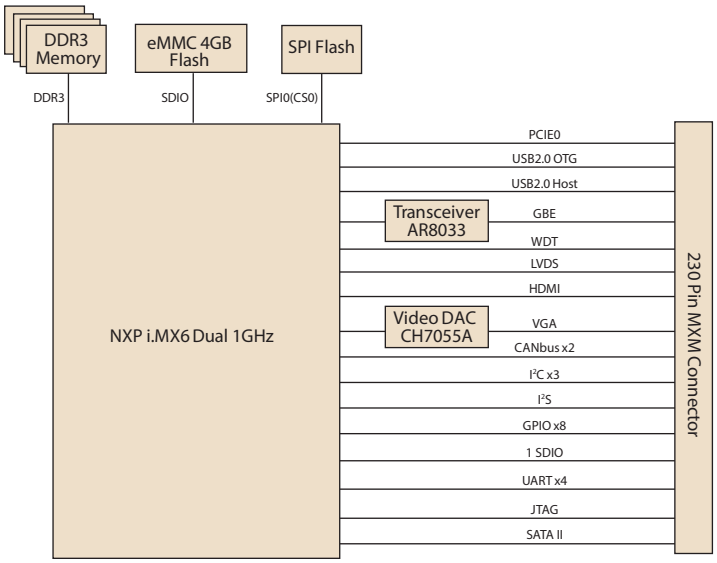


## Ordering Information

| Part No. | CPU | Memory | Flash Memory | UART | LAN | USB Host | USB OTG | Display | SATA | PCIe | HDMI | SD | CANbus | I²C | SPI | Size | Power Input | Operating Temperature |
|---|---|---|---|---|---|---|---|---|---|---|---|---|---|---|---|---|---|---|
| ROM-7420CQ-MEA1E | i.MX6 Quad 1 GHz | 2GB | 4GB | 4 | 1 | 1 | 1 | 2 x 24bit LVDS 1 x VGA | 1 | 1 | 1 | 1 | 2 | 3 | 1 | 70 x 70 x 5mm | 5V | 0 ~60 °C |
| ROM-7420WQ-MEA1E | i.MX6 Quad 1 GHz | 2GB | 4GB | 4 | 1 | 1 | 1 | 2 x 24bit LVDS 1 x VGA | 1 | 1 | 1 | 1 | 2 | 3 | 1 | 70 x 70 x 5mm | 5V | -40 ~85 °C |
| ROM-7420CD-MDA1E | i.MX6 Dual 1 GHz | 1 GB | 4 GB | 4 | 1 | 1 | 1 | 2 x 24-bit LVDS 1 x VGA | 1 | 1 | 1 | 1 | 2 | 3 | 1 | 70 x 70 x 5mm | 5V | 0 ~ 60 °C |
| ROM-7420WD-MDA1E | i.MX6 Dual 1 GHz | 1 GB | 4 GB | 4 | 1 | 1 | 1 | 2 x 24-bit LVDS 1 x VGA | 1 | 1 | 1 | 1 | 2 | 3 | 1 | 70 x 70 x 5mm | 5V | -40 ~ 85 °C |
| ROM-7420CS-MCA1E | i.MX6 Solo 1 GHz | 512 MB | 4 GB | 4 | 1 | 1 | 1 | LVDS or VGA | - | 1 | 1 | 1 | 2 | 3 | 1 | 70 x 70 x 5mm | 5V | 0 ~ 60 °C |

## Development Board

| Part No. | Description |
|---|---|
| ROM-DB7500-SCA1E | Development Board for Qseven v1.2 RISC Module |

## Optional Accessories

| Part No. | Description |
|---|---|
| 1700020442-01 | Debug Port Cable for ROM-7420 |
| 9696ED2000E | Debug Port Adapter for ROM-7420 |
| 96PSA-A36W12R1-3 | ADP A/D 100-240V 36W 12V C6 DC PLUG 90° |
| 1700001524 | Power Cord 3P UL 10A 125V 180cm |
| 1700019146 | Power Cord CCC 3P 10A 250V 183cm |
| 170203183C | Power Code 3P Europe (WS-010+WS-083)183cm |
| 170203180A | Power Cord 3P UK 2.5A/3A 250V 1.83M |
| 1700008921 | Power Cord 3P PSE 183cm |
| SQF-MSDM1-8G-21C | SQF MICRO SD C10 MLC 8G (-25 ~ 85 °C) |
| EWM-W135F01E | 802.11 a/b/g/n,AR9382,2T2R,Full size Mini PCIe |
| 1750006043 | Cable R/P SMA (F) to MHF 1.32 150mm |
| 1750008717-01 | Dipole Ant. D.B 2.4/5G WIFI 3dBi SMA/M-R BLK |
| EWM-C117FL06E* | LTE 4G,3G WCDMA/DC-HSPA+, 2G module, MPCIL280H |
| 1750006264 | Antenna cable SMA(F)/MHF 15cm |
| 1750008303-01 | Antenna AN0727-64SP6BSM |
| 1960061913N001 | Heat spreader O-NXP-S-5W 70x63x8-SC ROM-7420 |

* Please contact us to get suitable cellular module for your region.

## Dimensions

Unit: mm

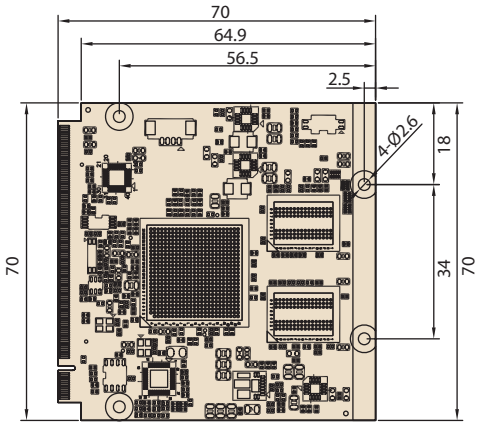

# Embedded Linux Support and Design-in Services

## Hardware Certified Ubuntu and Yocto with Eco Partner Services

Linux is the most popular embedded OS for transportation, outdoor services, factory automation, and mission critical applications. Its open source and kernel reliability features ease security updates, and make it particularly adaptable to new AI and Edge computing technology. Advantech has cooperated with Canonical and other software partners to provide hardware certified Ubuntu image and Yocto BSP as Linux offerings. The Advantech, Embedded Linux, and Android Alliance (ELAA) delivers local software services and consultation.

### Features

| Certified OS and BSP | Licensed Services | Numerous AI and Edge Resources | Local Partner Alliance |
|---|---|---|---|
| • Platform compatibility tests<br>• Preloaded functional driver and software stacks | • License authorized Canonical delivers 10-years of bug fixes and security updates<br>• In-house bundled service | • Containerized technology for service provision and deployment<br>• AI resources from Caffe, TensorFlow, and mxnet | • Embedded Linux and Android Alliance (ELAA) |

# WISE-DeviceOn

## Massive IoT Device Management Utility

IoT deployment and management typically involves numerous disparate devices installed on multiple sites. These devices require effective monitoring, managing, and tracking. Advantech's easy-to-use WISE-DeviceOn interface enables users to remotely monitor device health, troubleshoot problems, and send software/firmware updates over-the-air (OTA). In sum, DeviceOn empowers quick real-time responsiveness to emerging problems.

### Features

| Comprehensive Management | Remote Access | Efficient Operations |
|---|---|---|
| • Devices status<br>• Peripherals/firmware<br>• Open for extension | • Real-time monitoring<br>• Remote controls<br>• Troubleshooting | • Zero-touch on-boarding<br>• OTA updates<br>• Batch control |

### Product Highlights

**SOM-6883**
High-performance 11th Gen Intel® COMe Type 6 Module

**MIO-5375**
Compact 11th Gen Intel® Outdoor Focused 3.5" SBC

**EPC-B5587**
10th Gen Intel® Xeon® based Edge server

**EPC-R3220**
Arm based IoT Edge Gateway