ROM-5420

NXP ARM® Cortex®-A9 i.MX6 SMARC v1.1 Module

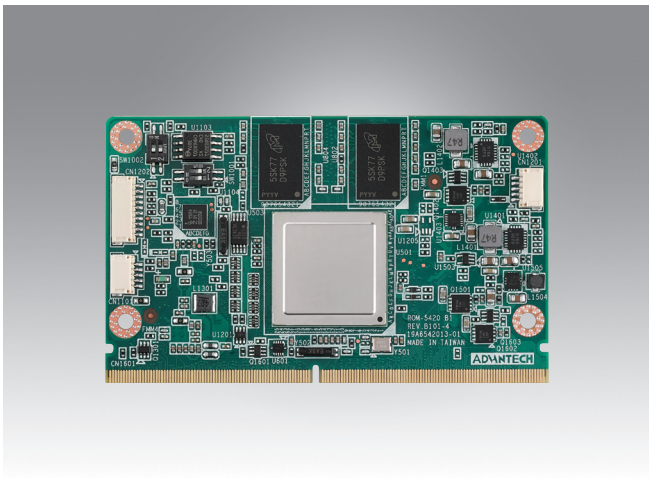

Features

- NXP ARM® Cortex® -A9 i.MX6 high performance processor
- Onbard DDR3 memory and eMMC 4GB
- Parallel RGB, HDMI, single channel 18/24-bit LVDS, 1366 x 768
- 2 x CAN, 4 x UART, 5 x I²C, 12 x GPIO, 1 x PCIe, 1 x camera input and 1 x Gigabit LAN
- Supports OpenGL ES 2.0 and OpenVG 1.1 hardware accelerators
- Supports full HD hardware encode/decode engine
- Low power consumption, fanless desgin
- Supports Linux and Android BSP

Introduction

ROM-5420 SAMRC v1.1 Module integrates ARM Cortex-A9 NXP i.MX6 series ultra low power SoC and I/O solution chips to be OS support ready. NXP i.MX6 supports 2D, 3D graphics acceleration, full HD 1080P video decoding and an HD 1080p video encoding hardware engine.

ROM-5420 has Advantech ROM-DB5900 Evaluation Carrier Board for easy integration and design reference; we also offer referenced schematics and layout checklists for carrier board development. Additionally, optimized Linux BSP, test utilities, HW design utilities and reference codes are ready for application development and device integration.

Specifications

Form Factor		SMARC v1.1
Processor System	CPU	NXP ARM Cortex-A9 i.MX6 800MHz/1GHz
Memory	Technology	DDR3 1066 MHz up to 2GB
	Capacity	On-board DDR3
	Flash	4 GB eMMC NAND Flash for O.S. and 4 MB SPI NOR Flash for Advantech boot loader
Graphics	LVDS	1 Single 24-bit LVDS, 1366 x 768 at 60Hz
	HDMI	1920 x 1080 at 60Hz
	Parallel RGB	1 24-bit TTL, 1920 x 1200 at 60Hz
	VGA	-
	Graphics Engine	2 IPUs. OpenGL ES 2.0 for 3D, BitBlt for 2D and OpenVG 1.1
	H/W Video Codec	Decoder: MPEG-4 ASP, H.264 HP, H.263, MPEG-2 MP, MJPEG BP Encoder: MPEG-4 SP, H.264 BP, H.263, MJPEG BP
Ethernet	Chipset	NXP i.MX6 integrated RGMII
	Speed	1 x 10/100/1000 Mbps
RTC	RTC	Yes
WatchDog Timer		256-level timer interval, from 0 ~ 128 sec
I/O	PCIe	1 PCIe x 1
	SATA	1 SATA II *
	USB	1 USB 2.0, 1 USB 2.0 OTG
	Audio	I²S
	SPDIF	1
	SDIO	1
	Serial Port	4 UART (2 x 2 wire, 2 x 4 wire w/ 3.3V)
	SPI	4
	CAN	2 x CAN bus 2.0B
	GPIO	12
	I²C	5
	Camera Input	1 MIPI v1.0, 4x Lane
	System Bus	-
	Touch	-
	Keypad	-
Power	Power Supply Voltage	+3 ~ 5.25 V
	Power Consumption	3.1W (Max)
Environment	Operating Temperature	0 ~ 60 °C/ -40 ~ 85 °C
	Operating Humidity	0% ~ 90% relative humidity, non-condensing
Mechanical	Dimensions (W x D)	82 x 50 mm
Operation System		Linux & Android
Certifications		CE/FCC Class B

* Dual/Quad CORE SKU ONLY

研伟科技 15323776600

Block Diagram

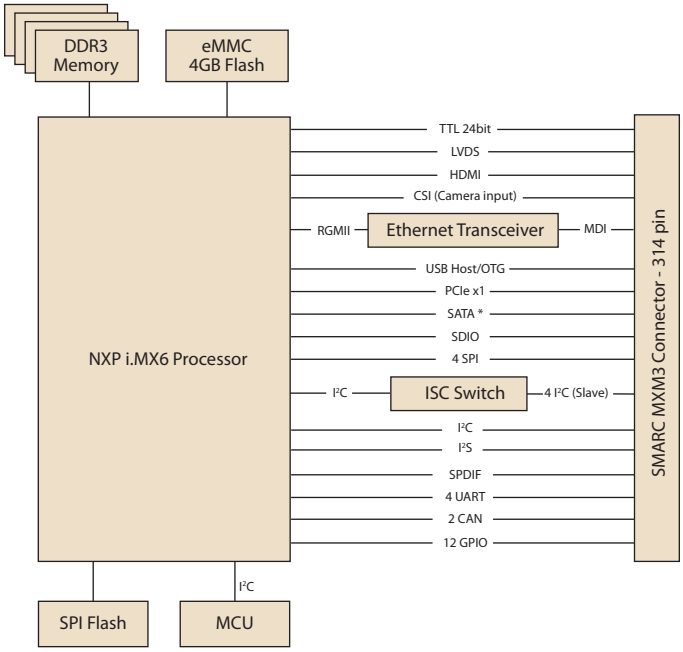

Ordering Information

Part No.	CPU	Memory	Flash Memory	UART	LAN	USB Host	USB OTG	Display	SATA	PCIe	HDMI	SD	CANbus	I²C	SPI	Size	Power input	Operating Temperature
ROM-5420CD-MDB1E	i.mx6 Dual 1GHz	1GB	4 GB	4	1	1	1	1x 24bit LVDS 1x 24bit TTL 1x HDMI	1	1	1	1	2	5	4	82 x 50 x 5 mm	3 ~ 5.25V	0 ~ 60 °C
ROM-5420CD-MEB1E	i.mx6 Dual 1GHz	2GB	4 GB	4	1	1	1	1x 24bit LVDS 1x 24bit TTL 1x HDMI	1	1	1	1	2	5	4	82 x 50 x 5 mm	3 ~ 5.25V	0 ~ 60 °C
ROM-5420CQ-MEB1E	i.mx6 Quad 1GHz	2GB	4 GB	4	1	1	1	1x 24bit LVDS 1x 24bit TTL 1x HDMI	1	1	1	1	2	5	4	82 x 50 x 5 mm	3 ~ 5.25V	0 ~ 60 °C
ROM-5420WQ-MEB1E	i.mx6 Quad 800MHz	2GB	4 GB	4	1	1	1	1x 24bit LVDS 1x 24bit TTL 1x HDMI	1	1	1	1	2	5	4	82 x 50 x 5 mm	3 ~ 5.25V	-40 ~ 85 °C

Development Board

Part No.	Description
ROM-DB5900-SWA2E	Developmemt Board for SMARC v1.1
ROM-DK5420-F0A1E	Evaluation kit for ROM-5420 Module

Optional Accessories

Part No.	Description
1700022373-01	Debug port cable for ROM-3420/5420
ROM-ED20-00A1E	Debug adapter board
1960075867N001	Heat spreader
1930005215	Screws for heat spreader
1960063089N001	Semi heat sink
1930004835	Screws for heat spreader and semi heat sink
96PSA-A36W12R1-3	ADAPTER 100-240V 36W 12V 3A
1700001524	Power cord 3P UL 10A 125V 180cm
170203183C	Power cord 3P Europe (WS-010+WS-083)183cm
1700008921	Power cord 3P PSE 183cm
170203180A	Power cord 3P UK 2.5A/3A 250V 1.83M
1700019146	Power Cord CCC 3P 10A 250V 183cm
SQF-ISDM1-16G-21C	SQ Flash SD card UHS-I MLC 16GB (0 ~ 70 °C)
SQF-ISDM1-16G-21E	SQ Flash SD card UHS-I MLC 16GB (-40 ~ 85 °C)
EWM-W188M201E	WiFi 802.11ac/abgn 2T2R and BT4.2
1750008671-01	Dipole Ant.SMA/M-R 2.4/5G 2.5/4dBi BLK 109mm
1750007965-01	Antenna cable, SMA (M) to MHF4, 300mm
EWM-C117FL06E*	LTE 4G,3G WCDMA/DC-HSPA+, 2G module, MPCI-L280H
1750008303-01	Antenna AN0727-64SP6BSM
1750006009	Antenna Cable SMA (F) to MHF 1.32 25cm

* Please contact us to get suitable cellular module for your region.

Dimensions

Unit: mm

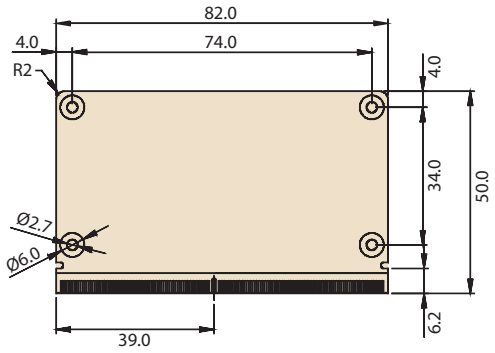

Embedded Linux Support and Design-in Services

Hardware Certified Ubuntu and Yocto with Eco Partner Services

Linux is the most popular embedded OS for transportation, outdoor services, factory automation, and mission critical applications. Its open source and kernel reliability features ease security updates, and make it particularly adaptable to new AI and Edge computing technology. Advantech has cooperated with Canonical and other software partners to provide hardware certified Ubuntu image and Yocto BSP as Linux offerings. The Advantech, Embedded Linux, and Android Alliance (ELAA) delivers local software services and consultation.

Features

Certified OS and BSP	Licensed Services	Numerous AI and Edge Resources	Local Partner Alliance
• Platform compatibility tests • Preloaded functional driver and software stacks	• License authorized Canonical delivers 10-years of bug fixes and security updates • In-house bundled service	• Containerized technology for service provision and deployment • AI resources from Caffe, TensorFlow, and mxnet	• Embedded Linux and Android Alliance (ELAA)

WISE-DeviceOn

Massive IoT Device Management Utility

IoT deployment and management typically involves numerous disparate devices installed on multiple sites. These devices require effective monitoring, managing, and tracking. Advantech's easy-to-use WISE-DeviceOn interface enables users to remotely monitor device health, troubleshoot problems, and send software/firmware updates over-the-air (OTA). In sum, DeviceOn empowers quick real-time responsiveness to emerging problems.

Features

Comprehensive Management	Remote Access	Efficient Operations
• Devices status • Peripherals/firmware • Open for extension	• Real-time monitoring • Remote controls • Troubleshooting	• Zero-touch on-boarding • OTA updates • Batch control

Product Highlights

SOM-6883
High-performance 11th Gen Intel® COMe Type 6 Module

MIO-5375
Compact 11th Gen Intel® Outdoor Focused 3.5" SBC

EPC-B5587
10th Gen Intel® Xeon® based Edge server

EPC-R3220
Arm based IoT Edge Gateway