UBC-220

NXP ARM® Cortex®-A9 i.MX6 2.5" IoT Gateway

Features

- NXP ARM® Cortex®-A9 i.MX6 Dual Lite 1 GHz processor
- Onboard DDR3 1GB, 800MHz
- 4 GB eMMC Flash Memory
- Dual display HDMI 1920x1080P and single channel 18/24 bit LVDS
- Rich I/O with 1 4-wire RS-232, 1 USB 2.0, 1 USB OTG
- Dual mini-PCIe slots for Wi-Fi/Cellular module support
- Low power consumption, fanless design
- Supports wall mounting, 10x10 VESA and DIN rails

Specifications

Form Factor		2.5"Box computer
Processor System	CPU	NXP ARM® Cortex®-A9 i.MX6 dual-core lite 1 GHz processor
Memory	Technology	DDR3 800 MHz
	Capacity	1 GB of onboard DDR3
	Flash	4 GB of eMMC Flash for OS and 4 MB of NOR Flash for Advantech's boot loader
Graphics	HDMI	HDMI with 1920 x 1080 resolution
	LVDS	Single-channel 18/24-bit LVDS
	Graphics Engine	1 x IPU. OpenGL ES 2.0 for 3D, BitBlt for 2D and OpenVG 1.1
	H/W Video Codec	Decoder: MPEG-4 ASP, H.264 HP, H.263, MPEG-2 MP, MJPEG BP Encoder: MPEG-4 SP, H.264 BP, H.263, MJPEG BP
Ethernet	Chipset	NXP i.MX6 integrated RGMII
	Speed	1 10/100/1000 Mbps
Watchdog Timer	Watchdog Timer	From 1~6553s, power on/off 4s
I/O	USB	1 x USB 2.0 Type A
	USB OTG	1 x USB 2.0 OTG
	UART	1 x 4-wire RS-232
Indicator	LED	1 x Green LED for system power 1 x Green LED (user defined)
Expansion	Full-Size Mini PCIe	1 (with USB signal only)
	Half-Size Mini PCIe	1 (with USB & PCIe signal)
	SD Socket	1
	SIM	1
	Antenna Socket	1
Power	Power Supply Voltage	12 V_{DC}
	Power Type	DC-in
	Power Consumption	4.4 Watts (max. load)
Environment	Operating Temperature	0 ~ 60 °C
	Operating Humidity	5 ~ 95% relative humidity, non-condensing
Mechanical	Dimensions	142 x 101 x 30 mm
	Mounting	Wall mount, DIN rail, VESA mount
	Weight	210 g
Operating System	Linux	Yocto 2.1 (Kernel 4.1.15)
	Android	Android 6.0.1
Certifications		CE/FCC Class B

美生 研伟科技 15323776600

Dimensions

Unit: mm

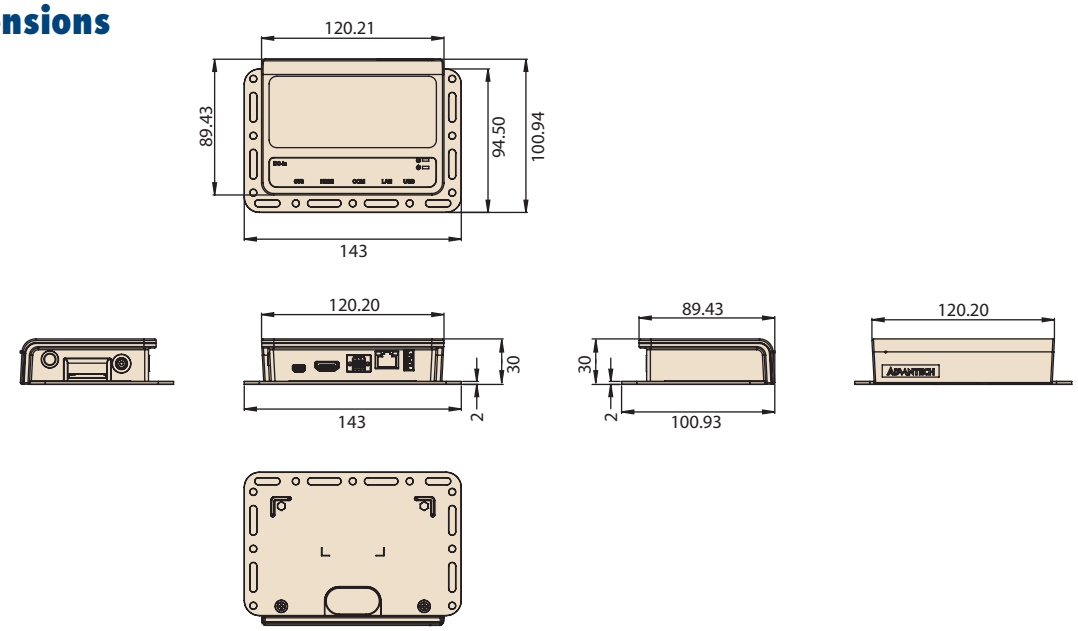

Ordering Information

Part Number	CPU	Memory	Flash	HDMI	VGA	LVDS	LAN	Serial Port	USB Host	SD	Software	Operating Temperature
UBC-220DL-MDA1E	NXP i.MX6 dual-core lite, 1 GHz	1 GB	4 GB	1	-	1	1	1 x 4-wire RS-232	1 USB 2.0 1 OTG	1	Linux Android	0 ~ 60 °C

Packing List

Part Number	Description
1652006794-01	6-pin terminal block

Optional Accessories

Part Number	Description
96PSA-A36W12R1-3	ADP A/D 100-240V 36W 12V C6 DC PLUG 90°
1700001524	Power cord 3P UL 180cm
170203183C	Power cord 3P EU 183cm
170203180A	Power cord 3P UK 183cm
1700019146	Power Cord CCC 3P 10A 250V 183cm
1700008921	Power Cord 3P PSE 183cm
EWM-W135H01E	802.11 a/b/g/n,AR9382,2T2R,Half size Mini PCIe
EWM-C117FL06E*	LTE 4G,3G WCDMA/DC-HSPA+, 2G module, MPCI-L280H
1750006043	Cable R/P SMA (M) to MHF 1.32 150 mm (Wi-Fi cable)
1750008717-01	Dipole Ant. D.B 2.4/5G WIFI 3dBi SMA/M-R BLK
1750006264	Antenna SMA(F)/MHF 15 cm SMALFN8-3150A-00X00R
1750008303-01	Antenna AN0727-64SP6BSM
1700021565-01	Debug cable
SQF-MSDM1-8G-21C	SQF MICRO SD C10 MLC 8G (-25 ~ 85 °C)
EBC-RS03DINRAILKIT	ASS'Y Din Rail Kit for Boss mini EBC-RS03

* Please contact us to get suitiable celluar module for your region.

External I/O

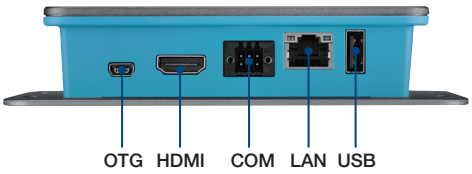

Embedded Linux Support and Design-in Services

Hardware Certified Ubuntu and Yocto with Eco Partner Services

Linux is the most popular embedded OS for transportation, outdoor services, factory automation, and mission critical applications. Its open source and kernel reliability features ease security updates, and make it particularly adaptable to new AI and Edge computing technology. Advantech has cooperated with Canonical and other software partners to provide hardware certified Ubuntu image and Yocto BSP as Linux offerings. The Advantech, Embedded Linux, and Android Alliance (ELAA) delivers local software services and consultation.

Features

Certified OS and BSP	Licensed Services	Numerous AI and Edge Resources	Local Partner Alliance
• Platform compatibility tests • Preloaded functional driver and software stacks	• License authorized Canonical delivers 10-years of bug fixes and security updates • In-house bundled service	• Containerized technology for service provision and deployment • AI resources from Caffe, TensorFlow, and mxnet	• Embedded Linux and Android Alliance (ELAA)

WISE-DeviceOn

Massive IoT Device Management Utility

IoT deployment and management typically involves numerous disparate devices installed on multiple sites. These devices require effective monitoring, managing, and tracking. Advantech's easy-to-use WISE-DeviceOn interface enables users to remotely monitor device health, troubleshoot problems, and send software/firmware updates over-the-air (OTA). In sum, DeviceOn empowers quick real-time responsiveness to emerging problems.

Features

Comprehensive Management	Remote Access	Efficient Operations
• Devices status • Peripherals/firmware • Open for extension	• Real-time monitoring • Remote controls • Troubleshooting	• Zero-touch on-boarding • OTA updates • Batch control

Product Highlights

SOM-6883
High-performance 11th Gen Intel® COMe Type 6 Module

MIO-5375
Compact 11th Gen Intel® Outdoor Focused 3.5" SBC

EPC-B5587
10th Gen Intel® Xeon® based Edge server

EPC-R3220
Arm based IoT Edge Gateway