EPC-R3220

TI Sitara™ AM3352 Cortex®-A8 ARM-Based IoT Gateway

Features

- TI Sitara™ AM3352 Cortex®-A8 800MHz processor
- 1GB of DDR3-800 and 8 GB of eMMC NAND Flash onboard
- 2 Gigabit Ethernet ports
- 2 RS232/485, 1 USB OTG, 6 GPIO
- WiFi/BT/LTE solution ready
- Yocto Linux support
- -20 ~ 70 °C operating temperature/ 12~24V DC power supply
- Equipped with hardware watchdog timer for system protection

Introduction

EPC-R3220 is a RISC-based box computer integrated with the TI Sitara AM3352 Cortex-A8 0.8GHz processor. It is designed for applications that require multiple connectivity points and low power consumption. The EPC-R3220 offers dual RS-232/485 serial ports with Modbus/OPC-UA protocol support for date collection, 6GPIOs for indication or device control, dual 10/100/1000 Ethernet ports, one wifi/BT onboard solution and one Mini-PCIE that can expand to an LTE solution. EPC-R3220 supports wide-ranging power input and temperature and supports both DIN-rail and wall mounting.

Specifications

Form Factor		Box computer
Processor System	CPU	TI Sitara™ AM3352 Cortex®-A8 800MHz processor
	Capacity	1GB of onboard DDR3 at 800 MHz
	Flash	8 GB of eMMC NAND Flash for OS and 4 MB of SPI NOR Flash for ADV loader
Ethernet	Transceiver	RTL 8211
	Speed	2 x 10/100/1000 Mbps
WLAN	WIFI/BT	IEEE 802.11ac/a/b/g/n 2*2 WLAN+BT 4.2 On board (option)
WatchDog Timer		MSP430G2202 (timeout: 1 ~ 6553s, default 60s/power on/off 1s)
I/O	USB	1 x USB2.0 OTG
	Serial Port	2 x RS232/485 w/ 4wires
	GPIO	6
	I^2C	1 by pin header
	SPI	1 by pin header
	Button	1 x Reset button
	Indicator	4 (1 x Power, 3 x User Programmable)
Expansion	Mini PCIe	1/USB signal only
	M.2	NA
	SD Socket	1 x Mirco SD slot
	SIM	1 x Nano SIM slot
	Antenna Hole	4
Power	Power Supply Voltage	12 ~ 24 V DC-in
	Power Type	2-pole lockable DC-in
	Power Consumption	4.7W (burning)
Environment	Operational Temperature	-20 ~ 70 °C
	Operating Humidity	5 ~ 95% relative humidity, non-condensing
Mechanical	Dimensions (W x D x H)	139 x 85 x 30 mm
Operating System		Linux Yocto2.4
Certifications		CE/FCC/CCC/BSMI/NCC/SRRC/UL/VCCI

吴生 研伟科技 15323776600

Dimensions

Unit: mm

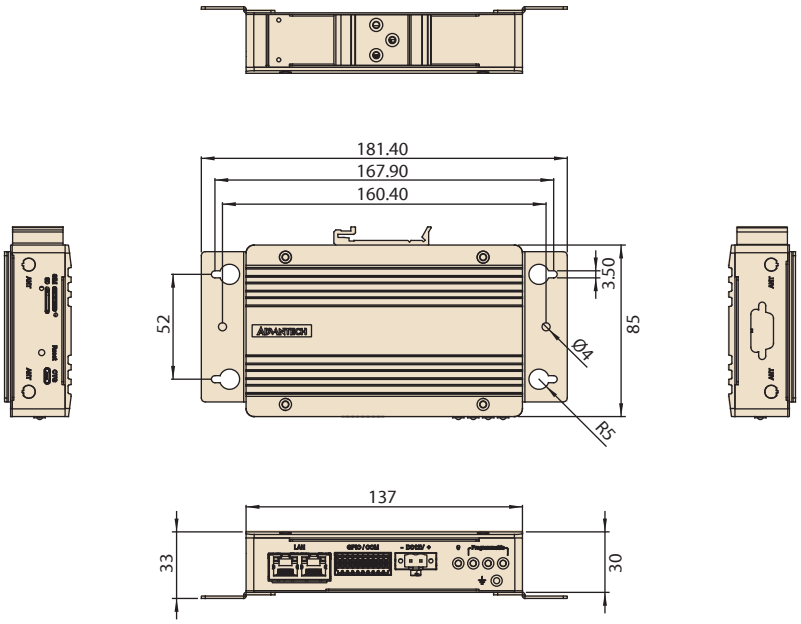

Ordering Information

Part Number	CPU	Memory	eMMC	SD	Serial	GPIO	USB OTG	LAN	Wi-Fi	TPM	Operating Temperature	Add-on
EPC-R3220IS-OLA1E	TI AM3352	1GB	8GB	1	1	1	1	2	-	-	-20 ~ 70 °C	DeviceOn
EPC-R3220IS-OLA1KE	TI AM3352	1GB	8GB	1	1	1	1	2	1	1	-20 ~ 70 °C	DeviceOn
EPC-R3220IS-OMA1E	TI AM3352	1GB	8GB	1	1	1	1	2	-	-	-20 ~ 70 °C	CommBridge*
EPC-R3220IS-OMA1KE	TI AM3352	1GB	8GB	1	1	1	1	2	1	1	-20 ~ 70 °C	CommBridge*

*CommBridge only for China

Packing List

Part Number	Description
EPC-R3220	EPC-R3220 with 1GDDR/8GeMMC
1652008019-01	2x10P/2.54 Terminal Plug for COM/GPIO
1652005203	2P 90D(F) Plug-in block for power in

External I/O

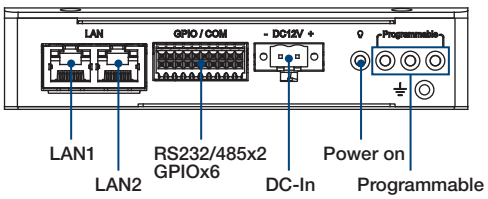

Optional Accessories

Part Number	Description
96PSA-A36W12R1-3	ADP A/D 100-240V 36W 12V
1700023307-01	DC jack/plug-in cable 1*2P-5.0 10 cm RSB-4220
170203183C	Power cord 3P Europe (WS-010+WS-083) 183 cm
170203180A	Power cord 3P UK 2.5A/3A 250 V 1.83 M
1700001524	Power cord 3P UL 10A 125 V 180 cm
1700019146	Power cord CCC 3P 10A 250V 183cm
ROM-ED20-00A1E	Debug adapter board
1700020562-01	Debug port cable
1700023619-01	USB OTG cable_typeA M to mirco USB
1950016423T101	DIN RAIL(BLACK WEAVE)
1960056982T003	MOUNTING BRACKET
1930001241	Screw M3x5L S/S D=4.8 H=1 (2+), for wall mount (x4) & DinRail (x3)
EMIO-220S-MPU01E	High Speed RS-422/RS-485 port module, 2-Ch, USB I/F, -40 ~ +85 °C
1750008800-01	Cable Ant.SMA/F-R-BH MFH4/113 BLK L100
1750008772-01	2Dipole Ant.D.B 2.4+5G WIFI 3/4.4dBi SMA/M-R BLK
968AD00479*	EC20CEFAG-MINIPCIE R2.1 LTE Cat 4 for China
1750008424-01	LTE Antenna Dipole L=148.5mm 4dBi A9703021
1750008461-01	Cable Ant. SMA/F-R-BH R/A MHF/113 WHT L83 WWAN1
1930007942	Screw for Wallmount (x4) and DinRail (x3)
1930006668-01	Screw for Mini-PCIE module

* Please contact us to get suitable LTE solution for your region.

Embedded Linux Support and Design-in Services

Hardware Certified Ubuntu and Yocto with Eco Partner Services

Linux is the most popular embedded OS for transportation, outdoor services, factory automation, and mission critical applications. Its open source and kernel reliability features ease security updates, and make it particularly adaptable to new AI and Edge computing technology. Advantech has cooperated with Canonical and other software partners to provide hardware certified Ubuntu image and Yocto BSP as Linux offerings. The Advantech, Embedded Linux, and Android Alliance (ELAA) delivers local software services and consultation.

Features

Certified OS and BSP	Licensed Services	Numerous AI and Edge Resources	Local Partner Alliance
• Platform compatibility tests • Preloaded functional driver and software stacks	• License authorized Canonical delivers 10-years of bug fixes and security updates • In-house bundled service	• Containerized technology for service provision and deployment • AI resources from Caffe, TensorFlow, and mxnet	• Embedded Linux and Android Alliance (ELAA)

WISE-DeviceOn

Massive IoT Device Management Utility

IoT deployment and management typically involves numerous disparate devices installed on multiple sites. These devices require effective monitoring, managing, and tracking. Advantech's easy-to-use WISE-DeviceOn interface enables users to remotely monitor device health, troubleshoot problems, and send software/firmware updates over-the-air (OTA). In sum, DeviceOn empowers quick real-time responsiveness to emerging problems.

Features

Comprehensive Management	Remote Access	Efficient Operations
• Devices status • Peripherals/firmware • Open for extension	• Real-time monitoring • Remote controls • Troubleshooting	• Zero-touch on-boarding • OTA updates • Batch control

Product Highlights

SOM-6883
High-performance 11th Gen Intel® COMe Type 6 Module

MIO-5375
Compact 11th Gen Intel® Outdoor Focused 3.5" SBC

EPC-B5587
10th Gen Intel® Xeon® based Edge server

EPC-R3220
Arm based IoT Edge Gateway