RSB-4410

NXP ARM® Cortex®-A9 i.MX6 3.5" SBC

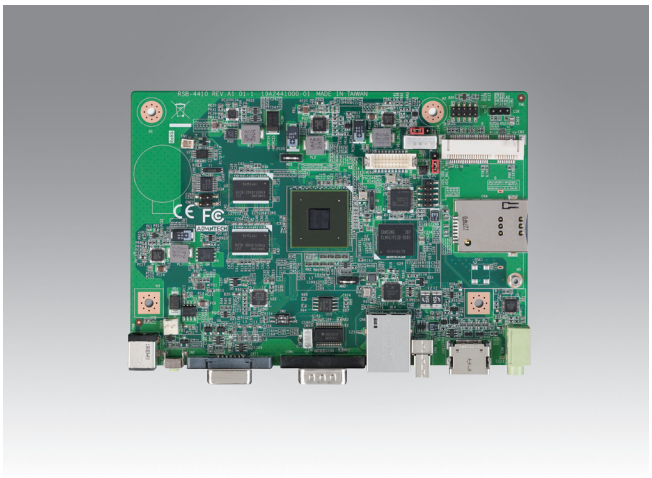

Features

- NXP ARM® Cortex®-A9 i.MX6 Dual/Quad 1 GHz
- Onboard 1/2GB DDR3 memory and 4GB eMMC
- HDMI and VGA 1920x1080 at 60Hz, Single Channel 18/24 bit LVDS
- 3 UART, 1 GbE, 3 USB 2.0
- mini-PCIe for WIFI/3G support
- Low power consumption, fanless design
- Supports Linux and Android

Introduction

RSB-4410 is a RISC 3.5" single board computer (SBC) powered by a high-performance NXP ARM® Cortex®-A9 i.MX6 processor that supports full HD video encoding/decoding and Gigabit Ethernet networking. RSB-4410 also features mini PCIe and SIM card slots for integrating Wi-Fi and 3G modules. This system can be equipped with Linux BSP V3.0.35 or Android BSP 4.2.2, enabling customers to develop unique application software.

Specifications

Form Factor		3.5" SBC	
Processor System	CPU	NXP ARM® Cortex®-A9 i.MX6 dual-core processor at 1 GHz	NXP ARM® Cortex®-A9 i.MX6 quad-core processor at 1 GHz
	Technology	DDR3 1066 MHz	
	Capacity	On-board DDR3 1GB	On-board DDR3 2GB
	Flash	4 GB of eMMC NAND Flash for OS and 4 MB of SPI NOR Flash for Advantech's boot loader	
Graphics	LVDS	1 single-channel 18/24-bit LVDS	
	HDMI	1 HDMI, 1920 x 1080 at 60Hz	
	VGA	1 VGA, 1920 x 1080 at 60Hz	
	Graphics Engine	3 IPUs. OpenGL ES 2.0 for 3D, BitBlt for 2D and OpenVG 1.1	
	H/W Video Codec	Decoder: MPEG-4 ASP, H.264 HP, H.263, MPEG-2 MP, MJPEG BP Encoder: MPEG-4 SP, H.264 BP, H.263, MJPEG BP	
Ethernet	Chipset	NXP i.MX6 integrated RGMII	
	Speed	1 x 10/100/1000 Mbps	
WatchDog Timer		256-level timer intervals, from 0 ~ 128 sec	
I/O	SATA	-	
	SATA Power	-	
	USB	1 x Type A USB and 2 USB pin headers	
	Audio	1 x line-out	
	SPDIF	-	
	SDIO	-	
	Serial Port	2 x 2-wire RS-232 pin headers 1 x 4-wire RS-232, DB9	
	SPI	-	
	CAN	-	
	GPIO	-	
	I2C	-	
	System Bus	-	
	Touch	-	
	I/R	1 x I/R remote control pin header	
	Button	1 x reset button	
Expansion	Mini PCIe	1 x mini PCIe slot	
	SD Socket	1 x SD slot	
	SIM	1 x SIM slot	
Power	Power Supply Voltage	12 V	
	Power Type	DC-in	
	Power Consumption	2.3W (Max)	
Environment	Operating Temperature	0 ~ 60 °C/-40 ~ 85 °C	
	Operating Humidity	5 ~ 95% relative humidity, non-condensing	
Mechanical	Dimensions (W x D)	146 x 102 x 20 mm	
Operation System		Linux and Android	
Certifications		CE/FCC Class B	

易华 研伟科技 15323776600

Block Diagram

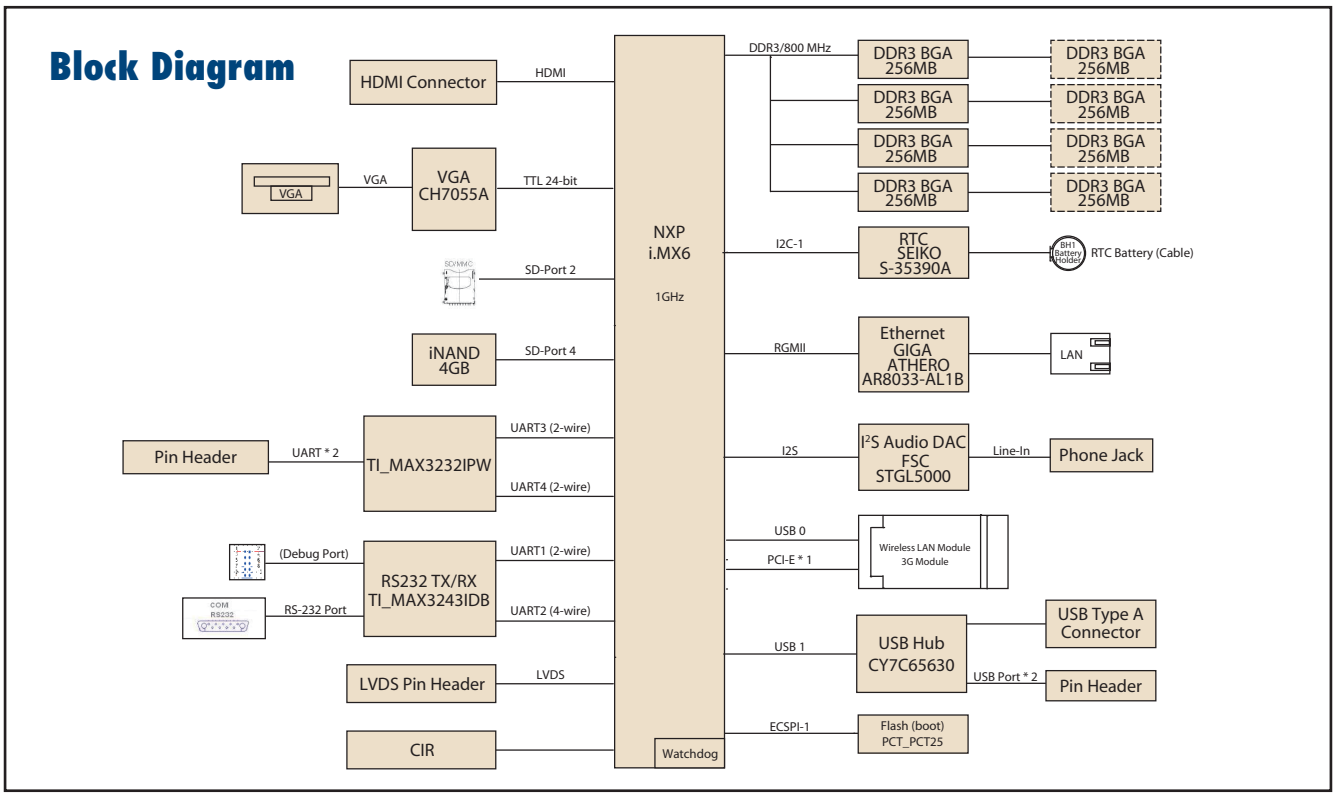

Ordering Information

Part Number	CPU	Memory	Flash Memory	HDMI	VGA	LVDS	LAN	Serial Port	SATA	USB Host	System Bus	SD	CAN Bus	Operating Temperature
RSB-4410CD-MDA1E	NXP i.MX6 dual-core, 1 GHz	1 GB	4 GB	1	1	1	1	2 x 2-wire RS-232, 1 x 4-wire RSB-232	-	3	-	1	-	0 ~ 60 °C
RSB-4410WD-MDA1E	NXP i.MX6 dual-core, 1 GHz	1 GB	4 GB	1	1	1	1	2 x 2-wire RS-232, 1 x 4-wire RSB-232	-	3	-	1	-	-40 ~ 85 °C
RSB-4410CQ-MEA1E	NXP i.MX6 quad-core, 1 GHz	2 GB	4 GB	1	1	1	1	2 x 2-wire RS-232, 1 x 4-wire RSB-232	-	3	-	1	-	0 ~ 60 °C
RSB-4410WQ-MEA1E	NXP i.MX6 quad-core, 1 GHz	2 GB	4 GB	1	1	1	1	2 x 2-wire RS-232, 1 x 4-wire RSB-232	-	3	-	1	-	-40 ~ 85 °C

Packing List

Part Number	Description	Quantity
RSB-4410	RSB-4410 SBC	1

Optional Accessories

Part Number	Description
96PSA-A36W12R1-3	Adapter 100-240 36W 12V 3A 9NA0362308
SQF-ISDM1-8G-21C	SQF SDHC C10 UHS-I MLC 8G, 1CH (-25~85°C)
EWM-W135F01E	802.11 a/b/g/n, Atheros AR9382, 2T2R
EWM-C117FL06E*	LTE 4G,3G WCDMA/DC-HSPA+, 2G module, MPCI-L280H
1750006043	Cable R/P SMA (M) to MHF 1.32 150mm (Wi-Fi Cable)
1750008717-01	Dipole Ant. D.B 2.4/5G WIFI 3dBi SMA/M-R BLK
1750006264	Antenna SMA(F)/MHF 15cm SMALFN8-3150A-00X00R
1750008303-01	Antenna AN0727-64SP6BSM
1960051438N001	Cooler I-NB-ICH7 S-3W 31x31x12-WC DAC-BC05 40C
1700021565-01	Debug cable
1700018730	USB cable
1700022161-01	UART cable
170203183C	Power cord 3P Europe (WS-010+WS-083) 183 cm
170203180A	Power cord 3P UK 2.5A/3A 250 V 1.83 M
1700001524	Power cord 3P UL 10A 125 V 180 cm
1700008921	Power Cord 3P PSE 183cm
1700019146	Power Cord CCC 3P 10A 250V 183cm

* Please contact us to get suitable cellular module for your region.

Dimensions

Unit: mm

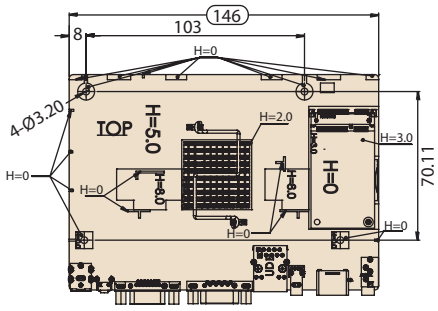

External I/O

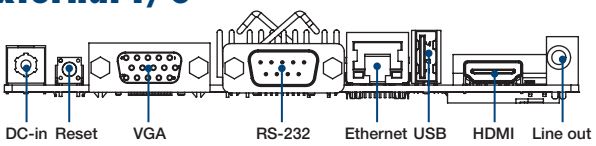

Embedded Linux Support and Design-in Services

Hardware Certified Ubuntu and Yocto with Eco Partner Services

Linux is the most popular embedded OS for transportation, outdoor services, factory automation, and mission critical applications. Its open source and kernel reliability features ease security updates, and make it particularly adaptable to new AI and Edge computing technology. Advantech has cooperated with Canonical and other software partners to provide hardware certified Ubuntu image and Yocto BSP as Linux offerings. The Advantech, Embedded Linux, and Android Alliance (ELAA) delivers local software services and consultation.

Features

Certified OS and BSP	Licensed Services	Numerous AI and Edge Resources	Local Partner Alliance
• Platform compatibility tests • Preloaded functional driver and software stacks	• License authorized Canonical delivers 10-years of bug fixes and security updates • In-house bundled service	• Containerized technology for service provision and deployment • AI resources from Caffe, TensorFlow, and mxnet	• Embedded Linux and Android Alliance (ELAA)

WISE-DeviceOn

Massive IoT Device Management Utility

IoT deployment and management typically involves numerous disparate devices installed on multiple sites. These devices require effective monitoring, managing, and tracking. Advantech's easy-to-use WISE-DeviceOn interface enables users to remotely monitor device health, troubleshoot problems, and send software/firmware updates over-the-air (OTA). In sum, DeviceOn empowers quick real-time responsiveness to emerging problems.

Features

Comprehensive Management	Remote Access	Efficient Operations
• Devices status • Peripherals/firmware • Open for extension	• Real-time monitoring • Remote controls • Troubleshooting	• Zero-touch on-boarding • OTA updates • Batch control

Product Highlights

SOM-6883
High-performance 11th Gen Intel® COMe Type 6 Module

MIO-5375
Compact 11th Gen Intel® Outdoor Focused 3.5" SBC

EPC-B5587
10th Gen Intel® Xeon® based Edge server

EPC-R3220
Arm based IoT Edge Gateway