RSB-4810

Rockchip Arm Cortex-A55 RK3568 3.5" SBC

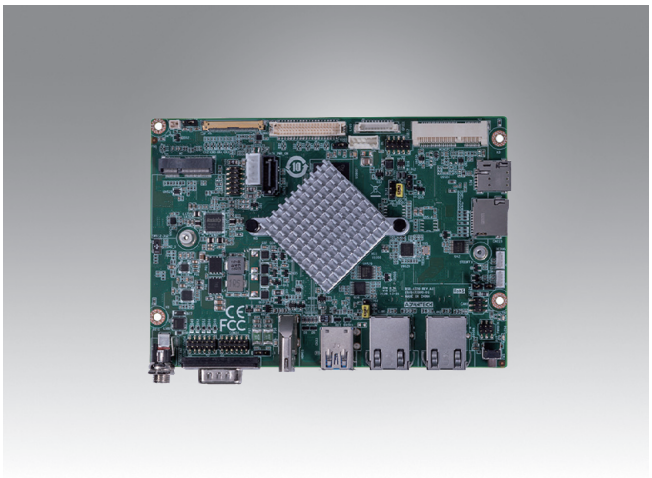

Features

- Rockchip RK3568 Arm Quad Cortex-A55, up to 2.0GHz
- Built-in NPU with processing performance of up to 1.0 TOPS
- Onboard 2/4GB LPDDR4 memory and 16/32GB eMMC
- Supports 1 x HDMI 2.0 4K, 1 x LVDS/MIPI-DSI, and 1 x eDP
- Supports 4K H.264/H.265 video decoder
- Provides 2 x GbE, 1 x SATA 3.0, 6 x UART, 2 x USB 3.0, 2 x USB 2.0, 1 x USB OTG, and 2 x CAN FD
- Provides a M.2 E Key with PCIE 3.0/USB 2.0/SDIO/UART signal for Wi-Fi 5/6 Modules, and a MINI-PCIE with PCIE 3.0/USB 2.0 signal for LTE/5G Modules
- Supports Linux and Android OS

Introduction

Advantech's RSB-4810 is an Arm-based 3.5" single board computer (SBC) powered by Rockchip RK3568 SOC. It leverages 4 x Arm Cortex-A55 cores, a 1.0 TOPs NPU, and a Mali-G52 graphics engine. RSB-4810 provides USB 3.0, PCIE 3.0, SATA 3.0, 2 x Gigabit Ethernet ports, a single channel LVDS (shared with MIPI-DSI), 6 x UART, and 2 x CAN FD for embedded applications. RSB-4810 also features Mini-PCIe, M.2 E-Key, and SIM card slot for Wi-Fi 6, BT, 5G/LTE, and AI acceleration modules. These features make Advantech's RSB-4810 an ideal solution for entry level edge AI computing in AIoT applications.

Specifications

Form Factor		3.5" SBC
Processor	CPU	Rockchip RK3568 Arm Quad Cortex-A55, up to 2.0GHz
Memory	Technology	LPDDR4 1333MHz
	NPU	Up to 1.0 Tops. Supports INT8/INT16 hybrid operation
	Capacity	On-board LPDDR4 2/4GB
	Flash	16/32GB of eMMC NAND flash for OS and Advantech's boot loader
Graphics	LVDS	1 x single channel LVDS(Default)or 1 x 4Lane MIPI-DSI
	HDMI	1 x HDMI 2.0, up to 4096x2304@60fps
	eDP	1, max 2.7Gbps
	Graphics Engine	Mali-G52 support OpenGL ES 1.1/2.0/3.2, Vulkan 1.0/1.1, OpenCL 2.0
	H/W Video Codec	Decoder: H.265 HEVC/MVC Main10/H.264 AVC/MVC Main10/VP9 Profile0/2 up to 4096x2304@60fps; VP8,VC1,MPEG-4/2/1, up to 1920x1088@60fps Encoder: H.264/AVC H.265/HEVC MP@level4.1, up to 1920x1080@100fps. Support YUV/RGB video source with rotation and mirror
Ethernet	Chipset	RTL8211FSI
	Speed	2 x 10/100/1000 Mbps
WatchDog Timer		1~6553s, default 60s, power on/off 1s by MCU
I/O	SATA	1 x SATA 3.0
	SATA Power	1
	USB	1 x USB 3.2 Gen 1 by 1 Type A 1 x USB 3.2 Gen 1 by 1 Type A/OTG 2 x USB2.0 Pin header
	Audio	1 x Mic in, HP, and Speaker out via pin header
	SPDIF	-
	SDIO	-
	Serial Port	1 x RS-232 w/4wire via DB9; 2 x RS-232/RS-485 by pin header;(SW config) 3 x RS-232 by pin header; 1 x Debug by pin header
	SPI	-
	CAN	2 x CAN FD
	GPIO	6 x GPIO via pin header (3.3V TTL level)
	I²C	1 x can be configured to GPIO via software
	System Bus	-
	Touch	-
	MIPI CSI	-
	Button	1 x reset button and 1 x power button via a pin header
Expansion	Mini PCIe	1 x Mini PCIe slot, w/USB 2.0 and 1 x PCIe 3.0
	SD Socket	1 x Micro SD slot
	SIM Slot	1 x SIM slot
	M.2 Socket	1 x M.2 2230 Key E slot, w/SIDO*UART*PCIe 3.0 x, and 1 x USB 2.0
Power	Power Supply Voltage	12 V
	Power Type	DC-in
	Power Consumption	Boost 13W
Environment	Operating Temperature	0 ~ 60 °C/-40 ~ 85 °C (32 ~ 140 °F/-40 ~ 185 °F)
	Operating Humidity	5 ~ 95% relative humidity, non-condensing
Mechanical	Dimensions (W x D)	146 x 102 mm (5.7 ~ 4.01 in)
Operation System		Linux Debian10 and Android12
Certifications		CE/FCC Class B

美生研伟科技 15323776600

All product specifications are subject to change without notice.

Block Diagram

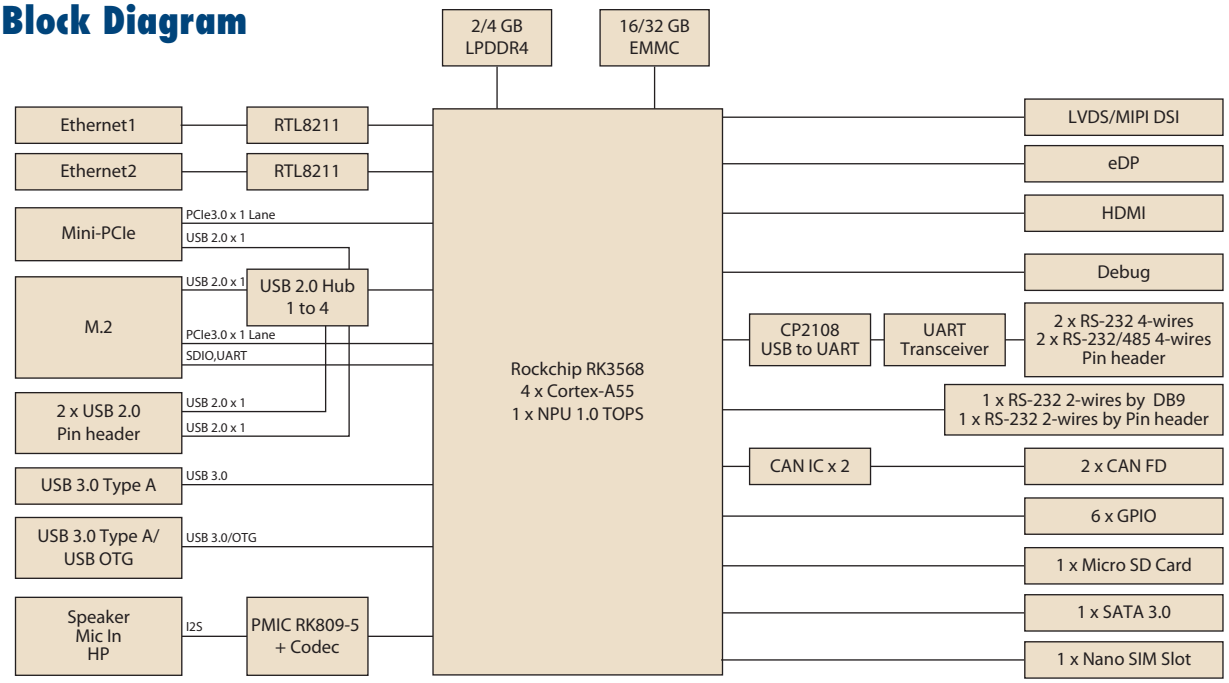

Ordering Information

Part Number	CPU	Memory	Flash	HDMI	eDP	LVDS	LAN	Serial Port	SATA	USB	SD	CAN Bus	Operating Temperature
RSB-4810CQ-MNA1E	Rockchip RK3568	2GB	16GB	1	1	1	2	6	1	4	1	2	0 ~ 60 °C (32 ~ 140 °F)
RSB-4810WQ-MNA1E	Rockchip RK3568J	2GB	16GB	1	1	1	2	6	1	4	1	2	-40 ~ 85 °C (-40 ~ 185 °F)
RSB-4810CQ-NNA1E	Rockchip RK3568	4GB	32GB	1	1	1	2	6	1	4	1	2	0 ~ 60 °C (32 ~ 140 °F)

Packing List

Part Number	Description
RSB-4810	RSB-4810 3.5" SBC with heatsink

Dimensions

Unit: mm

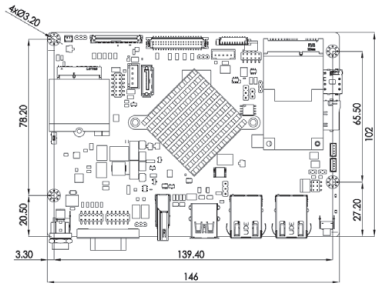

External I/O

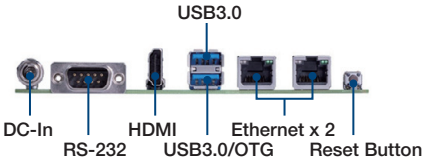

Optional Accessories

Part Number	Description
96PSA-A36W12W7-5	ADP A/D 100-240V 36W 12V C6 LOCK DC JACK 62368
170203183C	Power Cord 3P EU 10A 250V 183 cm
170203180A	Power Cord 3P UK 10A 250V 183 cm
1700001524	Power Cord 3P UL 10A 125V 180cm
1700008921	Power Cord 3P PSE 183 cm
1700019146	Power Cord CCC 3P 10A 250V 183cm
1700021565-01	A Cable 1 x 4P-1.25/D-SUB 9P(F), Debug
1700023588-01	M Cable USB-A 4P(M)/USB-A 4P(M) 120cm
1700031060-01	2 x M cable D-SUB 9P(M)/ 2 x 6P, RS232/485x2
1700028482-01	F CABLE 2 x 6P, RS232 x2
1700031093-01	A cable 2 x 5P-2.0/2 x JACK, line out and Mic
1700002172	A Cable 2 x 5P-2.0/2 x USB-A 4P(F), 2 x USB
1750007965-01	Antenna Cable R/P SMA (M) to MHF4, 300 mm (11.8 in)
1750008671-01	Dipole Ant.SMA/M-R 2.4/5G 2.5/4dBi BLK 109 mm (4.29 in)
EWM-W188M201E	Wi-Fi 802.11ac/abgn 2T2R and BT4.2
EWM-C117FL06E*	LTE 4G,3G WCDMA/DC-HSPA+, 2G module, MPCI-L280H
968AD00479*	4G module LTE Cat 4 for China
1750006264	Antenna cable SMA(F)/MHF 15 cm (5.9 in)
1750008303-01	Antenna AN0727-64SP6BSM
1700031071-01	LVDS cable for IDK-1107WR
1700031103-01	EDP cable 1*40P-0.5/1*30P-0.5 20cm
SQF-ISDM1-16G-21C	SQ Flash SD card UHS-I MLC 16GB (0 ~ 70 °C)
IDK-1107WR-40WVA1E	7" LED panel 400N with 4WR touch, 800x480(G)
XUTC-B156XTN07.1	AUO 15.6", 1366 x 768, 220nits, for UTC project

* Please contact us to get suitable cellular module for your region.