ROM-5722

NXP i.MX8M Plus Cortex®-A53 SMARC 2.1 Computer-on-Module

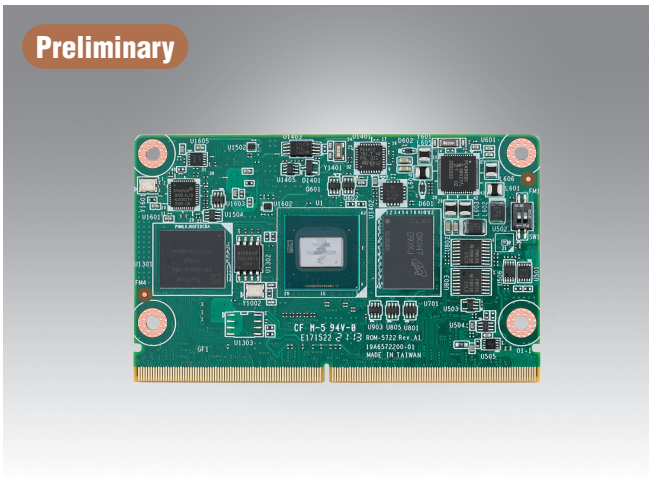

Features

- NXP Arm® Cortex®-A53 i.MX8M Plus Quad/Dual up to 1.8 GHz
- 1 x Arm Cortex-M7 core
- Onboard LPDDR4 6 GB, 4000MT/s memory
- 1 x 4 lane MIPI-DSI,1 x Dual channel LVDS
- 2 x USB3.2 Gen1By1, 4 x USB2.0, 1 x USB 2.0 OTG, 4 x UART, 5 x I2C, 14 x GPIO, 1 x PCIe3.0, 2 x Gigabit LAN, 2 x CAN (CANBus for CQ, CAN-FD for WQ)
- Neural network accelerator up to 2.3 TOPS
- Supports Ycoto Linux and Android

Introduction

Advantech ROM-5722 SMARC 2.1 Computer-on-Module is powered by NXP i.MX8M Plus SOC which includes up to 4 Arm Cortex-A53 cores in combination with one Cortex-M7 real time processor and Vivante GC7000UL graphics engine. It provides USB2.0, USB3.2 Gen1By1, Gigabit Ethernet, MIPI-CSI, PCI Express, Dual channel LVDS shared with MIPI-DSI for embedded applications.

ROM-5722 is paired with Advantech SOM-DB2510 carrier board for faster end product peripheral integration and time-to-market. The reference schematics and layout checklists documentations for carrier board development will be provided along with the open-sourced Linux BSP, test utilities, hardware design utilities and reference drivers.

Specifications

Form Factor		SMARC2.0 & SMARC2.1 compliance
Processor System	CPU	NXP i.MX8M Plus Cortex-A53 Quad/Dual core (up to 1.8GHz)
	MCU	1 x Arm Cortex-M7 core
Memory	Technology	LPDDR4 4000MT/s
	Capacity	On-board 6 GB
	Flash	16 GB eMMC NAND Flash for O.S. and 8 MB QSPI NOR Flash for board information
NPU	NPU	2.3 TOP/s Neural Network performance
Graphics	LVDS/MIPI DSI	1 x 4 lane MIPI-DSI,1 x Single channel LVDS or 1x Dual channel LVDS
	HDMI	1 x HDMI up to 3840 x 2160 at 30Hz
	Parallel RGB	-
	VGA	-
	Graphics Engine	GC7000UL with 2D/3D Graphic Acceleration supporting 1G Pixel/s, OpenVG 1.1, Open GL ES3.1, Vulkan, and Open CL 1.2 FP.
	H/W Video Codec	Decoder: H.265, H.264, VP8/9 1080p Encoder:H.264, VP8 1080p
Ethernet	Chipset	2 x NXP i.MX8M Plus integrated RGMII
	Speed	2 x 10/100/1000 Mbps
RTC	RTC	Yes
WatchDog Timer		Yes (1~6553s, power on/off 4s)
Security		TPM 2.0
I/O	PCIe	1 x PCIe 3.0
	SATA	-
	USB	2 USB3.2 Gen1By1 4 USB 2.0 1 USB 2.0 OTG
	Audio	2 x I²S
	SPDIF	-
	SDIO	1
	Serial Port	2 x 4-wire UART and 2 x 2-wire UART
	SPI	3
	CAN	2 (CANbus for ROM-5722CQ, CAN-FD for ROM-5722WQ)
	GPIO	14
	I²C	5
	Camera Input	1 x 4-lane MIPI CSI, 1 x 2-lane MIPI CSI
	System Bus	-
	Touch	-
	Keypad	-
Power	Power Supply Voltage	Fixed 5V DC source and allow 3.3 V ~ 5.25 V operates directly from single level Lithium Ion cells
	Power Consumption	TBD
Environment	Operating Temperature	0 ~ 60 °C/ -40 ~ 85 °C
	Operating Humidity	5 ~ 95% relative humidity, non-condensing
Mechanical	Dimensions (W x D)	82 x 50 mm
Operation System		Linux & Android
Certifications		CE/FCC Class B

昊生研伟科技 15323776600

Block Diagram

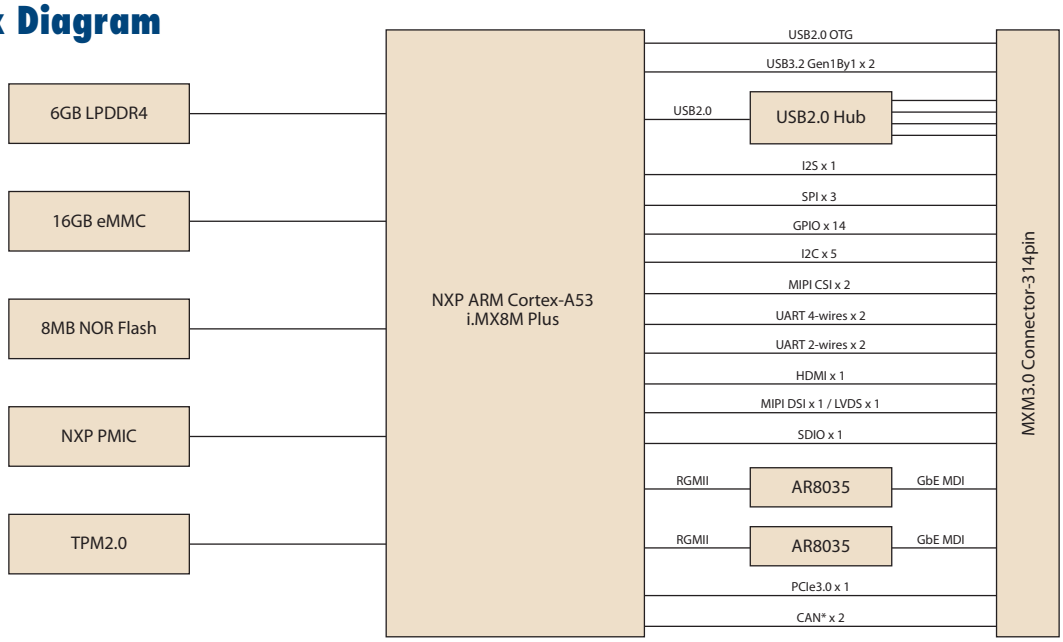

*Support CAN-FD in wide temp. SKU: ROM-5722WQ

Ordering Information

Part No.	CPU	Memory	Flash Memory	UART	LAN	USB3.2 Gen1By1	USB 2.0	Display	PCIe	SD	I2S	I2C	SPI	WiFi/ BT	Size	Power input	Operating Temperature
ROM-5722WQ-REA1E	i.MX8M Plus Quad	6GB	16GB	4	2	2	5	1 x HDMI 1 x MIPI DSI, 1 x Single ch LVDS or 1 x Dual ch LVDS	1	1	2	5	3	-	82 x 50 x 5 mm	3 ~ 5.25V	-40 ~ 85 °C
ROM-5722CQ-REA1E	i.MX8M Plus Quad	6GB	16GB	4	2	2	5	1 x HDMI 1 x MIPI DSI, 1 x Single ch LVDS or 1 x Dual ch LVDS	1	1	2	5	3	-	82 x 50 x 5 mm	3 ~ 5.25V	0 ~ 60 °C

Development Board

Part No.	Description
SOM-DB2510	SMARC 2.1 Carrier Board

Optional Accessories

Part No.	Description
1701100300	Debug port cable
1700019474	D-SUB 9P(F)/D-SUB 9P(F) RS232/RS485 100c
TBD	Heat Spreader
1960063089N001	Semi Heat Sink
193B021490	Screw for Heat Spreader and Semi Heat Sink
96PSA-A36W12R1-3	ADAPTER 100-240V 36W 12V 3A
1700001524	Power Cord 3P UL 10A 125V 180cm
170203183C	Power Cord 3P Europe (WS-010+WS-083) 183cm
1700019146	Power Cord CCC 3P 10A 250V 183cm
170203180A	Power Cord 3P UK 2.5A/3A 250V 1.83M
1700008921	Power Cord 3P PSE 183cm
SQF-ISDM1-16G-21C	SQF SD Card I-SD UHS-I MLC 16G (0~70°C)
SQF-ISDM1-16G-21E	SQF I-SD UHS-I MLC 16G (-40~85°C)
EWM-W163M201E	802.11 a/b/g/n/ac,QCA6174A,2T2R,w/BT4.1,M.2 2230
1750008717-01	Dipole Ant. D.B 2.4/5G WIFI 3dBi SMA/M-R BLK
1750007965-01	Antenna Cable R/P SMA (M) to MHF4, 300mm
EWM-C117FL06E*	LTE 4G,3G WCDMA/DC-HSPA+, 2G module, MPCI-L280H
1750008303-01	Antenna AN0727-64SP6BSM
1750006009	Antenna Cable SMA (F) to MHF 1.32 25cm

Dimensions

Unit: mm

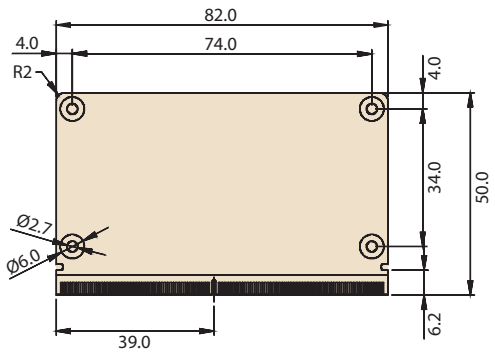

*Please contact us for suggesting suitable cellular module for your region.

Embedded Linux Support and Design-in Services

Hardware Certified Ubuntu and Yocto with Eco Partner Services

Linux is the most popular embedded OS for transportation, outdoor services, factory automation, and mission critical applications. Its open source and kernel reliability features ease security updates, and make it particularly adaptable to new AI and Edge computing technology. Advantech has cooperated with Canonical and other software partners to provide hardware certified Ubuntu image and Yocto BSP as Linux offerings. The Advantech, Embedded Linux, and Android Alliance (ELAA) delivers local software services and consultation.

Features

Certified OS and BSP	Licensed Services	Numerous AI and Edge Resources	Local Partner Alliance
• Platform compatibility tests • Preloaded functional driver and software stacks	• License authorized Canonical delivers 10-years of bug fixes and security updates • In-house bundled service	• Containerized technology for service provision and deployment • AI resources from Caffe, TensorFlow, and mxnet	• Embedded Linux and Android Alliance (ELAA)

WISE-DeviceOn

Massive IoT Device Management Utility

IoT deployment and management typically involves numerous disparate devices installed on multiple sites. These devices require effective monitoring, managing, and tracking. Advantech's easy-to-use WISE-DeviceOn interface enables users to remotely monitor device health, troubleshoot problems, and send software/firmware updates over-the-air (OTA). In sum, DeviceOn empowers quick real-time responsiveness to emerging problems.

Features

Comprehensive Management	Remote Access	Efficient Operations
• Devices status • Peripherals/firmware • Open for extension	• Real-time monitoring • Remote controls • Troubleshooting	• Zero-touch on-boarding • OTA updates • Batch control

Product Highlights

SOM-6883
High-performance 11th Gen Intel® COMe Type 6 Module

MIO-5375
Compact 11th Gen Intel® Outdoor Focused 3.5" SBC

EPC-B5587
10th Gen Intel® Xeon® based Edge server

EPC-R3220
Arm based IoT Edge Gateway