ROM-7720

NXP ARM Cortex-A72 i.MX8 QuadMax Qseven 2.1 Module

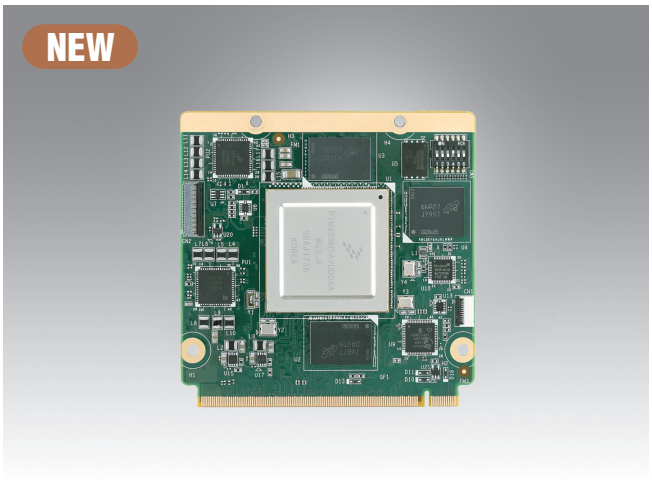

Features

- NXP ARM Cortex-A72 + A53 i.MX8 QuadMax 1.6GHz high performance processor
- Onboard LPDDR4 memory 4 GB
- Onboard eMMC NAND Flash 16 GB
- Supports OpenGL 3.0, 2.1; OpenGL ES 3.2; Open GL ES 3.1 (with AEP); Open GL ES 3.0, 2.0, and 1.1; OpenCL 2.0 and 1.1; OpenVG 1.1; and Vulkanc
- HDMI 4K, Dual Channel 24bit LVDS
- 1 CAN, 1 UART, 2 I2C, 8 GPIO, 1 I2S
- 3 USB 3.0; 1 USB OTG
- 1 SDIO, 1 SATA III
- 1 10/100/1000 Mbps Ethernet; 2 PCIe x1 Gen2
- Optional thermal solution

Introduction

ROM-7720 Qseven 2.1 Module powered by i.MX8 QuadMax Processor, which compose eight cores, including 2 ARM Cortex-A72 cores, 4 Cortex-A53 cores and 2 Cortex-M4F cores into one single package. ROM-7720 also escalate its graphic performance by dual 32-core GPU subsystems, 4K H.265 capable VPU, and dual failover-ready display controllers. The enhanced HAB secure & encrypted boot bring you a worry-free module platform for surveillance an video analysis application.

Specifications

Form Factor		Qseven 2.1
Processor System	CPU	NXP ARM Cortex-A72 i.MX8 QuadMax 1.6GHz 8 -Core Processor
Memory	Technology	LPDDR4 1600
	Capacity	On-board LPDDR4 4 GB
	Flash	16 GB eMMC NAND Flash for O.S. and 64 MB Quad SPI Flash for boot loader
Graphics	LVDS	2 x 24-bit LVDS, 1366 x 768 for 1ch; 1920 x 1080 for 2ch
	HDMI	1 x HDMI2.0, up to 4096 x 2160 at 60 Hz
	Graphics Engine	Vivante GC7000XS/VX
	H/W Video Codec	Decoder: MPEG-4 ASP, H.265 HP, H.264 HP, H.263, MPEG-2 MP, MJPEG BP Encoder: MPEG-4 SP, H.265 BP, H.264 BP, H.263, MJPEG BP
Ethernet	Chipset	NXP i.MX8 integrated RGMII
	Speed	1 x 10/100/1000 Mbps
RTC	RTC	Yes
WatchDog Timer		HW Watchdog Timer
I/O (Edge finger)	PCIe	2 PCIe
	SATA	1 SATA III
	USB	3 USB 3.0, 1 USB OTG
	I^2S	1
	SPDIF	-
	SDIO	1
	Serial Port	1
	SPI	1
	CAN	1
	GPIO	8
	I^2C	2
	System Bus	-
	Fan Control (PWM)	2
	Keypad	-
I/O (On board)	UART	3 (1 for CPU console , 2 for Cortex-M4)
	SD	-
	Camera	1 MIPI-CSI 4 Lane, 1 MIPI-CSI 2 Lane
Power	Power Supply Voltage	5 V
	Power Consumption	TBD
Environment	Operational Temperature	0 ~ 60° C / -40~85° C
	Operating Humidity	5 ~ 95% relative humidity, non-condensing
Mechanical	Dimensions (W x D)	70 x 70 mm
Certifications		CE/FCC Class B

昊生 研伟科技 15323776600

Block Diagram

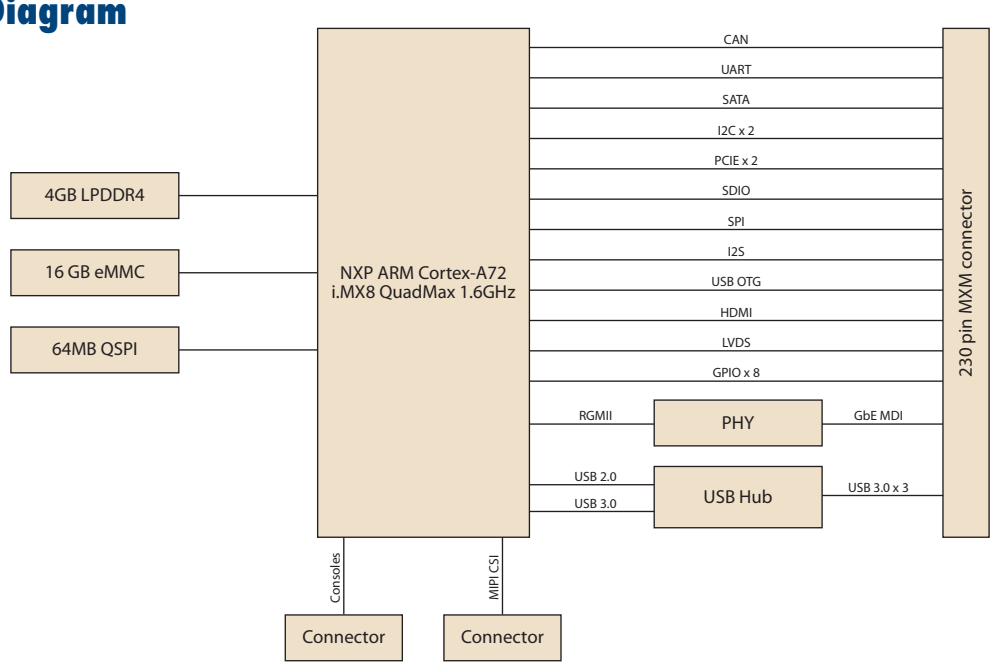

OS Specification

Operating System	Version Support
Linux	Yocto 2.5
Android	Android 9.0

Please visit https://advt.ch/aim-linux-download to know our latest software update

SW Specification

Software Application	Function Support
SUSI API	I2C, GPIO, SPI, WDT, RTC, Backlight Control
WISE-PaaS/DeviceOn	Built-in

Optional Accessories

Part No.	Description
ROM-DB7503-SCA1E	Development board for ROM Qseven Module
1700023619-01	A cable USB-A 4P(M)/micro USB 5P(M) 1m
1700029175-01	FFC cable 10P-0.5/10P-0.5 15cm
9696ED21000	ROM-ED21 A101-1 USB to 4 Uart debug board
96PSA-A36W12R1-3	ADAPTER 100-240V 36W 12V 3A
1700001524	Power Cord 3P UL 10A 125V 180cm
170203183C	Power Code 3P Europe (WS-010+WS-083)183cm
1700019146	Power Cord CCC 3P 10A 250V 183cm
170203180A	Power Cord 3P UK 2.5A/3A 250V 1.83M
1700008921	Power Cord 3P PSE 183cm
1970004566N001	ROM-7720 Heat Spreader 70x63x8 mm
1960058145N001	ROM-7720 Semi- Heat Sink 70x63x13.2 mm
1960089546T001	ROM-7720 Semi- Heat Sink 70x63x50 mm
1970004574T001	ROM-7720 Heat Sink with FAN 70x63x20.4

Ordering Information

Part No.	CPU	Memory	Flash Memory	UART	LAN	USB Host	USB OTG	Display	SATA	PCIe	HDMI	SD	CANbus	I²C	SPI	Size	Power Input	Operating Temperature
ROM-7720CO-QFA1E	i.MX8 Quad Max 1.6GHz	4 GB	16 GB	1	1	3	1	2 x 24-bit LVDS	1	2	1	1	1	2	2	70 x 70 x 5mm	5V	0 ~ 60 °C
ROM-7720WO-QFA1E	i.MX8 Quad Max 1.6GHz	4 GB	16 GB	1	1	3	1	2 x 24bit LVDS	1	2	1	1	1	2	2	70 x 70 x 5mm	5V	-40 ~ 85 °C

Development Board

Part No.	Description
ROM-DB7503-SCA1E	Development board for RISC Qseven 2.1 module

Embedded Linux Support and Design-in Services

Hardware Certified Ubuntu and Yocto with Eco Partner Services

Linux is the most popular embedded OS for transportation, outdoor services, factory automation, and mission critical applications. Its open source and kernel reliability features ease security updates, and make it particularly adaptable to new AI and Edge computing technology. Advantech has cooperated with Canonical and other software partners to provide hardware certified Ubuntu image and Yocto BSP as Linux offerings. The Advantech, Embedded Linux, and Android Alliance (ELAA) delivers local software services and consultation.

Features

Certified OS and BSP	Licensed Services	Numerous AI and Edge Resources	Local Partner Alliance
• Platform compatibility tests • Preloaded functional driver and software stacks	• License authorized Canonical delivers 10-years of bug fixes and security updates • In-house bundled service	• Containerized technology for service provision and deployment • AI resources from Caffe, TensorFlow, and mxnet	• Embedded Linux and Android Alliance (ELAA)

WISE-DeviceOn

Massive IoT Device Management Utility

IoT deployment and management typically involves numerous disparate devices installed on multiple sites. These devices require effective monitoring, managing, and tracking. Advantech's easy-to-use WISE-DeviceOn interface enables users to remotely monitor device health, troubleshoot problems, and send software/firmware updates over-the-air (OTA). In sum, DeviceOn empowers quick real-time responsiveness to emerging problems.

Features

Comprehensive Management	Remote Access	Efficient Operations
• Devices status • Peripherals/firmware • Open for extension	• Real-time monitoring • Remote controls • Troubleshooting	• Zero-touch on-boarding • OTA updates • Batch control

Product Highlights

SOM-6883
High-performance 11th Gen Intel® COMe Type 6 Module

MIO-5375
Compact 11th Gen Intel® Outdoor Focused 3.5" SBC

EPC-B5587
10th Gen Intel® Xeon® based Edge server

EPC-R3220
Arm based IoT Edge Gateway