ROM-7421

NXP ARM Cortex-A9 i.MX6 Qseven 2.0 Module

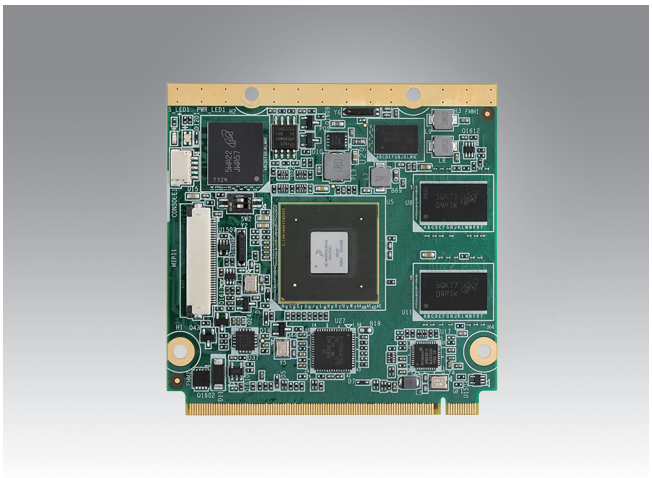

Features

- NXP ARM Cortex-A9 i.MX6 Solo/Dual Plus/Quad Plus 1 GHz high performance processor
- Onboard DDR3 memory 1 GB/2 GB
- Onboard eMMC NAND Flash 4 GB
- Supports OpenGL ES 2.0 and OpenVG 1.1 hardware accelerators, full HD 1080p video codec
- HDMI, Dual Channel 24bit LVDS
- 1 CAN, 2 UART, 2 I²C, 8 GPIO, 1 I²S
- 4 USB, 1 SDIO, 1 SATA II (Only for Dual Plus & Quad Plus)
- 1 10/100/1000 Mbps Ethernet; 1 PCIe x1 Gen2
- Optional thermal solution

Introduction

ROM-7421 Qseven Module integrates ARM Cortex-A9 NXP i.MX6 series ultra low power SoC and I/O solution chips to be Linux support ready. NXP i.MX6 supports 2D, 3D graphics acceleration, full HD 1080P video decoding and an HD 1080p video encoding hardware engine.

ROM-7421 has Advantech ROM-DB7501 Evaluation Carrier Board for easy integration and design reference; we also offer referenced schematics and layout checklists for carrier board development. Additionally, Linux BSP, test utilities, HW design utilities and reference codes are ready for application development and device integration.

Specifications

Form Factor		Qseven 2.0
Processor System	CPU	NXP ARM Cortex-A9 i.MX6 Solo/Dual Plus/Quad Plus 1 GHz
Memory	Technology	DDR3 1066 MT/s
	Capacity	On-board DDR3 1 GB/2 GB
	Flash	4 GB eMMC NAND Flash for O.S. and 4 MB SPI NOR Flash for Advantech boot loader
Graphics	LVDS	2 x 24-bit LVDS, 1366 x 768 for 1ch; 1920 x 1080 for 2ch
	HDMI	1920 x 1080
	Graphics Engine	2 IPUs. OpenGL ES 2.0 for 3D, BitBlt for 2D and OpenVG 1.1
	H/W Video Codec	Decoder: MPEG-4 ASP, H.264 HP, H.263, MPEG-2 MP, MJPEG BP Encoder: MPEG-4 SP, H.264 BP, H.263, MJPEG BP
Ethernet	Chipset	NXP i.MX6 integrated RGMII
	Speed	1 x 10/100/1000 Mbps
RTC	RTC	Yes
WatchDog Timer		HW Watchdog Timer
I/O (Edge finger)	PCIe	1 PCIe, 1 x Lane
	SATA	1 SATA II (Solo SKU does not support)
	USB	4 USB 2.0 (1 USB OTG)
	Audio	I²S
	SPDIF	-
	SDIO	1
	Serial Port	2 UART (4 wire)
	SPI	1
	CAN	1
	GPIO	8
	I²C	2
	System Bus	-
	Touch	-
	Keypad	-
I/O (On board)	UART	1 (for console)
	SD	1 microSD
	Camera	1 MIPI Video Capture Port
Power	Power Supply Voltage	5 V
	Power Consumption	4.4 Watts (Max)
Environment	Operational Temperature	0 ~ 60° C
	Operating Humidity	0% ~ 90% relative humidity, non-condensing
Mechanical	Dimensions (W x D)	70 x 70 mm
Operating System		Yocto Linux
Certifications		CE/FCC Class B

研伟科技 15323776600

All product specifications are subject to change without notice.

Block Diagram

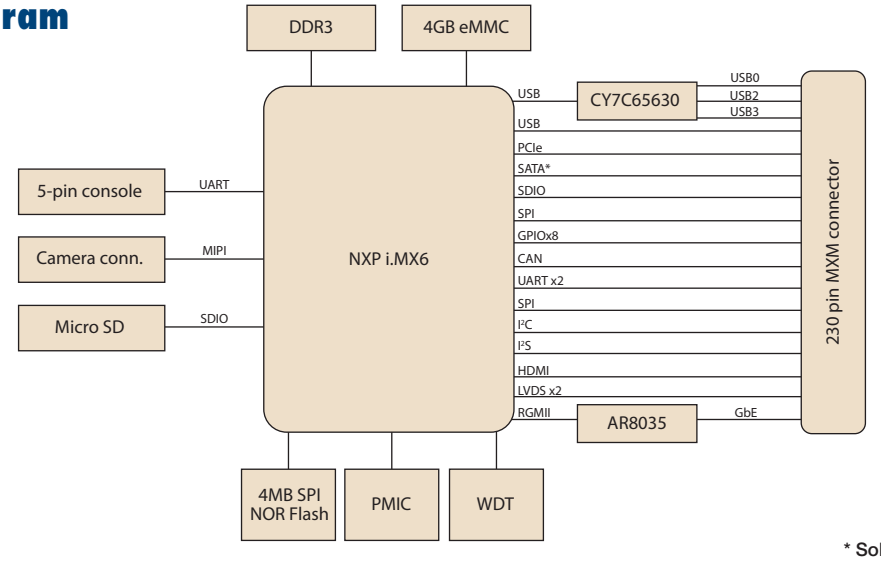

* Solo SKU doesn't support

Ordering Information

Part No.	CPU	Memory	Flash Memory	UART	LAN	USB Host	USB OTG	Display	SATA	PCIe	HDMI	SD	CANbus	I²C	SPI	Size	Power Input	Operating Temperature
ROM-7421CE-MDA1E	i.MX6 Dual Plus 1 GHz	1 GB	4 GB	2	1	4	1	2 x 24-bit LVDS	1	1	1	1	1	2	1	70 x 70 x 5mm	5V	0 ~ 60° C
ROM-7421CU-MEA1E	i.MX6 Quad Plus 1 GHz	2 GB	4 GB	2	1	4	1	2 x 24-bit LVDS	1	1	1	1	1	2	1	70 x 70 x 5mm	5V	0 ~ 60° C
ROM-7421CS-MDA1E	i.MX6 Solo 1 GHz	1GB	4GB	2	1	4	1	2 x 24-bit LVDS	-	1	1	1	1	2	1	70 x 70 x 5mm	5V	0 ~ 60° C

Development Board

Part No.	Description
ROM-DB7501-SCA1E	Development board for RISC Qseven 2.0 module

Dimensions

Unit: mm

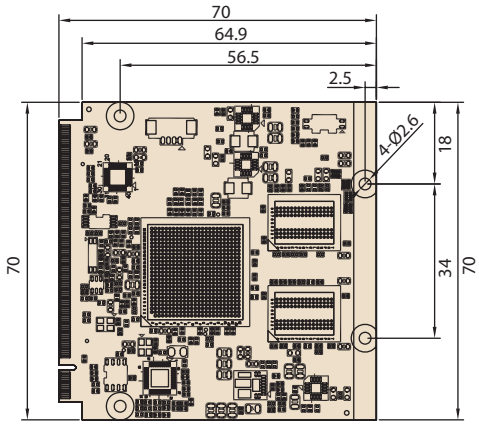

Optional Accessories

Part No.	Description
1700022373-01	Debug Port Cable for ROM-7421
9696ED2000E	Debug Port Adapter for ROM-7421
96PSA-A36W12R1-3	ADP A/D 100-240V 36W 12V C6 DC PLUG 90° 62368
1700001524	Power Cord 3P UL 10A 125V 180cm
170203183C	Power Code 3P Europe (WS-010+WS-083)183cm
170203180A	Power Cord 3P UK 2.5A/3A 250V 1.83M
1700008921	Power Cord 3P PSE 183cm
SQF-ISDS1-2G-86E	SQFlash SD card SLC 2G, 1CH (-40 ~ 85° C)
EWM-W142F01E	802.11 b/g/n,AR9287,2T2R,Full size Mini PCIe
1750007050-01	WiFi RP-SMA short SMA Jack(9.5mm) to U.FL_100mm (WiFi Cable)
1750000318	EMI Antenna 2DBI 2.4GHz SMA CONN for ARK-3384 (WiFi Antenna)
968EMW0093	Telit HE910-D Mini PCIE
1750007156-01	Cellular/GPS SMA Short JACK(9.5MM) L=100mm (3G Cable)
1750005865	Antenna L=10.9cm 50Ohm AN8921F-5701SM (3G Antenna)
1960079757N000	H.D R2 freescale-iMX6 S-7W 70x63x8-SC RO

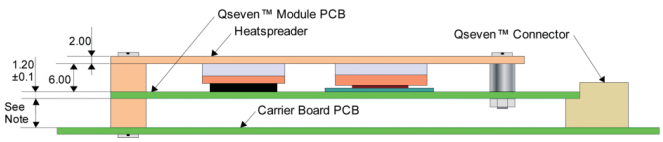

Note: Dimension is dependent on connector height used

All measurements are in millimeters
All dimensions without tolerance ±0.2mm

Embedded Linux Support and Design-in Services

Hardware Certified Ubuntu and Yocto with Eco Partner Services

Linux is the most popular embedded OS for transportation, outdoor services, factory automation, and mission critical applications. Its open source and kernel reliability features ease security updates, and make it particularly adaptable to new AI and Edge computing technology. Advantech has cooperated with Canonical and other software partners to provide hardware certified Ubuntu image and Yocto BSP as Linux offerings. The Advantech, Embedded Linux, and Android Alliance (ELAA) delivers local software services and consultation.

Features

Certified OS and BSP	Licensed Services	Numerous AI and Edge Resources	Local Partner Alliance
• Platform compatibility tests • Preloaded functional driver and software stacks	• License authorized Canonical delivers 10-years of bug fixes and security updates • In-house bundled service	• Containerized technology for service provision and deployment • AI resources from Caffe, TensorFlow, and mxnet	• Embedded Linux and Android Alliance (ELAA)

WISE-DeviceOn

Massive IoT Device Management Utility

IoT deployment and management typically involves numerous disparate devices installed on multiple sites. These devices require effective monitoring, managing, and tracking. Advantech's easy-to-use WISE-DeviceOn interface enables users to remotely monitor device health, troubleshoot problems, and send software/firmware updates over-the-air (OTA). In sum, DeviceOn empowers quick real-time responsiveness to emerging problems.

Features

Comprehensive Management	Remote Access	Efficient Operations
• Devices status • Peripherals/firmware • Open for extension	• Real-time monitoring • Remote controls • Troubleshooting	• Zero-touch on-boarding • OTA updates • Batch control

Product Highlights

SOM-6883
High-performance 11th Gen Intel® COMe Type 6 Module

MIO-5375
Compact 11th Gen Intel® Outdoor Focused 3.5" SBC

EPC-B5587
10th Gen Intel® Xeon® based Edge server

EPC-R3220
Arm based IoT Edge Gateway