ROM-5721

NXP i.MX8M Mini Cortex®-A53 SMARC 2.0/2.1 Computer-on-Module

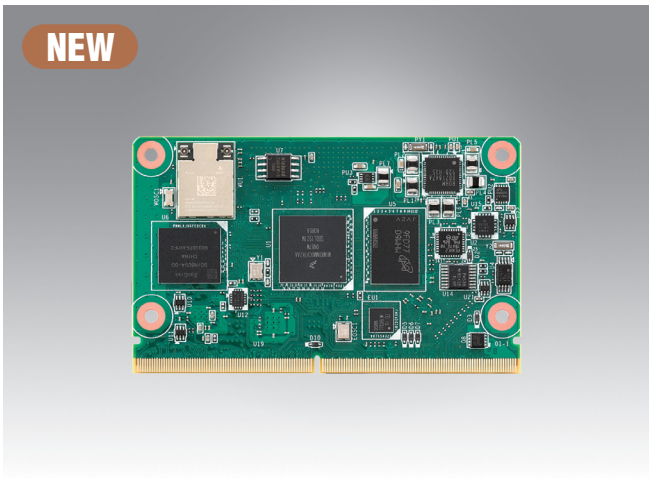

Features

- NXP i.MX 8M Mini processor with up to 4 Arm Cortex A53 cores
- 1 x Arm Cortex-M4 cores
- Onboard LPDDR4 memory and eMMC
- 1 x 4 lane MIPI-CSI,1 x Dual channel LVDS or 1 x Display Port
- 4 x USB2.0, 1 x USB 2.0 OTG, 4 x UART, 4 x I2C, 12 x GPIO, 1 x PCIe2.0, 1x Gigabit LAN
- Support OpenGL ES 2.0/1.1 by hardware accelerators
- Low power consumption design
- Support Linux and Android BSP

Introduction

Advantech ROM-5721 SMARC 2.0/2.1 Computer-on-Module is powered by NXP i.MX8M Mini SOC which includes up to 4 Arm Cortex-A53 cores in combination with one Cortex-M4 real time processor and Vivante GC320 , GC NanoUltra 3D graphics engine. It provides USB2.0, Gigabit Ethernet, MIPI-CSI, PCI Express, Dual channel LVDS shared with MIPI-DSI for embedded applications.

ROM-5721 is paired with Advantech ROM-DB5901 carrier board for faster end product peripheral integration and time-to-market. The reference schematics and layout checklists documentations for carrier board development will be provided along with the open-sourced Linux BSP, test utilities, hardware design utilities and reference drivers.

Specifications

Form Factor		SMARC2.0 & SMARC2.1 compliance
Processor System	CPU	NXP i.MX 8M Mini up to 4 Arm Cortex A53 cores, up to 1.8GHz
	MCU	1 x Arm Cortex-M4 core
Memory	Technology	LPDDR4-1866
	Capacity	Onboard 1GB/2GB LPDDR4
	Flash	8/16 GB eMMC NAND Flash for O.S. and 8 MB QSPI NOR Flash for board information
Graphics	LVDS/MIPI DSI	1 x 4 lane MIPI-CSI,1 x Dual channel LVDS or 1 x Display Port up to 1080P
	HDMI	-
	Parallel RGB	-
	VGA	-
	Graphics Engine	Vivante GC320, GC NanoUltra 3D GPU Support OpenGL ES 2.0, VG 1.1
	H/W Video Codec	Decoder: H.265, H.264, VP8/9 1080p Encoder:H.264, VP8 1080p
Ethernet	Chipset	1 x NXP i.MX8M Mini GbE controller
	Speed	10/100/1000 Mbps
RTC	RTC	Yes
WatchDog Timer		Yes
Security		TPM 2.0
I/O	PCIe	1 x PCIe 2.0
	SATA	-
	USB	4 USB 2.0 1 USB 2.0 OTG
	Audio	2 x I²S
	SPDIF	-
	SDIO	1
	Serial Port	2 x 4-wire UART and 2 x 2-wire UART
	SPI	2
	CAN	-
	GPIO	12
	I²C	4
	Camera Input	1 x 4-lane MIPI CSI
	System Bus	-
	Touch	-
	Keypad	-
Power	Power Supply Voltage	Fixed 5V DC source and allow 3.3 V ~ 5.25 V operates directly from single level Lithium Ion cells
	Power Consumption	TBD
Environment	Operating Temperature	0 ~ 60 °C/ -40 ~ 85 °C
	Operating Humidity	5 ~ 95% relative humidity, non-condensing
Mechanical	Dimensions (W x D)	82 x 50 mm
Operation System		Linux & Android
Certifications		CE/FCC Class B

吴生 研伟科技 15323776600

Block Diagram

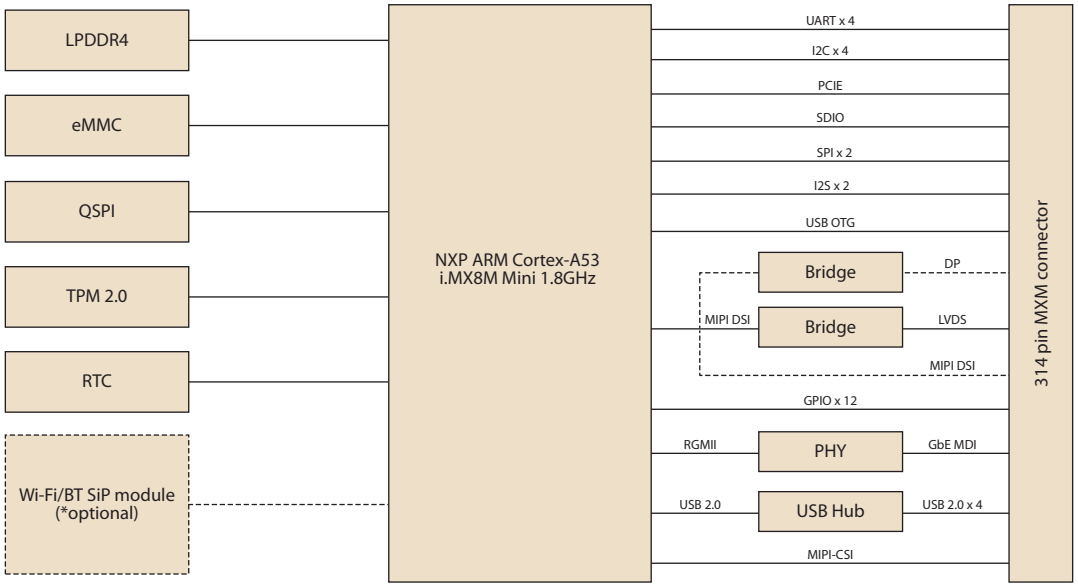

Ordering Information

Part No.	CPU	Memory	Flash Memory	UART	LAN	USB 2.0	Display	PCIe	SD	I2S	I2C	SPI	WiFi/ BT	Size	Power input	Operating Temperature
ROM-5721CQ-REA1E	i.MX8M Mini Quad	2GB	16GB	4	1	5	1 x Dual ch LVDS	1	1	2	4	2	-	82 x 50 x 5 mm	3 ~ 5.25V	0 ~ 60 °C
ROM-5721CD-RDA1E	i.MX8M Mini Dual	1GB	8GB	4	1	5	1 x MIPI DSI	1	1	2	4	2	-	82 x 50 x 5 mm	3 ~ 5.25V	0 ~ 60 °C
ROM-5721CS-RDA1E	i.MX8M Mini Solo	1GB	N/A	4	1	1	1 x MIPI DSI	1	1	2	4	2	-	82 x 50 x 5 mm	3 ~ 5.25V	0 ~ 60 °C

Development Board

Part No.	Description
ROM-DB5901-SWA1	Development Board for SMARC 2.0 Module

Optional Accessories

Part No.	Description
1701100300	Debug port cable for ROM-5721
1700019474	D-SUB 9P(F)/D-SUB 9P(F) RS232/RS485 100c
1970004648T001	Heat Spreader
1960063089N001	Semi Heat Sink
193B021490	Screw for Heat Spreader and Semi Heat Sink
96PSA-A36W12R1-3	ADAPTER 100-240V 36W 12V 3A
1700001524	Power Cord 3P UL 10A 125V 180cm
170203183C	Power Cord 3P Europe (WS-010+WS-083) 183cm
170203180A	Power Cord 3P UK 2.5A/3A 250V 1.83M
1700008921	Power Cord 3P PSE 183cm
SQF-ISDM1-16G-21C	SQF SD Card I-SD UHS-I MLC 16G (0~70°C)
SQF-ISDM1-16G-21E	SQF I-SD UHS-I MLC 16G (-40~85°C)
EWM-W163M201E	802.11 a/b/g/n/ac,QCA6174A,2T2R,w/BT4.1,M.2 2230
1750008717-01	Dipole Ant. D.B 2.4/5G WIFI 3dBi SMA/M-R BLK
1750007965-01	Antenna Cable R/P SMA (M) to MHF4, 300mm
EWM-C117FL06E*	LTE 4G,3G WCDMA/DC-HSPA+, 2G module, MPCI-L280H
1750007990-01	Antenna 4G/LTE full band L=11 cm 50 Ohm
1750006009	Antenna Cable SMA (F) to MHF 1.32 25cm

OS Specification

Operating System	Version Support
Linux	Yocto 2.5
Android	Android 9.0

Please visit https://advt.ch/aim-linux-download to know our latest software update

SW Specification

Software Application	Function Support
SUSI API	I2C, GPIO, SPI, WDT, RTC, Backlight Control
WISE-PaaS/DeviceOn	Built-in

Dimensions

Unit: mm

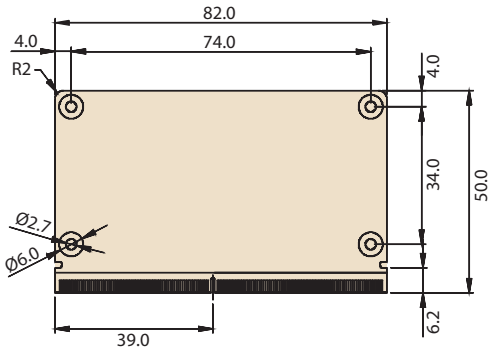

Embedded Linux Support and Design-in Services

Hardware Certified Ubuntu and Yocto with Eco Partner Services

Linux is the most popular embedded OS for transportation, outdoor services, factory automation, and mission critical applications. Its open source and kernel reliability features ease security updates, and make it particularly adaptable to new AI and Edge computing technology. Advantech has cooperated with Canonical and other software partners to provide hardware certified Ubuntu image and Yocto BSP as Linux offerings. The Advantech, Embedded Linux, and Android Alliance (ELAA) delivers local software services and consultation.

Features

Certified OS and BSP	Licensed Services	Numerous AI and Edge Resources	Local Partner Alliance
• Platform compatibility tests • Preloaded functional driver and software stacks	• License authorized Canonical delivers 10-years of bug fixes and security updates • In-house bundled service	• Containerized technology for service provision and deployment • AI resources from Caffe, TensorFlow, and mxnet	• Embedded Linux and Android Alliance (ELAA)

WISE-DeviceOn

Massive IoT Device Management Utility

IoT deployment and management typically involves numerous disparate devices installed on multiple sites. These devices require effective monitoring, managing, and tracking. Advantech's easy-to-use WISE-DeviceOn interface enables users to remotely monitor device health, troubleshoot problems, and send software/firmware updates over-the-air (OTA). In sum, DeviceOn empowers quick real-time responsiveness to emerging problems.

Features

Comprehensive Management	Remote Access	Efficient Operations
• Devices status • Peripherals/firmware • Open for extension	• Real-time monitoring • Remote controls • Troubleshooting	• Zero-touch on-boarding • OTA updates • Batch control

Product Highlights

SOM-6883
High-performance 11th Gen Intel® COMe Type 6 Module

MIO-5375
Compact 11th Gen Intel® Outdoor Focused 3.5" SBC

EPC-B5587
10th Gen Intel® Xeon® based Edge server

EPC-R3220
Arm based IoT Edge Gateway