ROM-5620

NXP i.MX8X Cortex®-A35 SMARC 2.0/2.1 Computer-on-Module

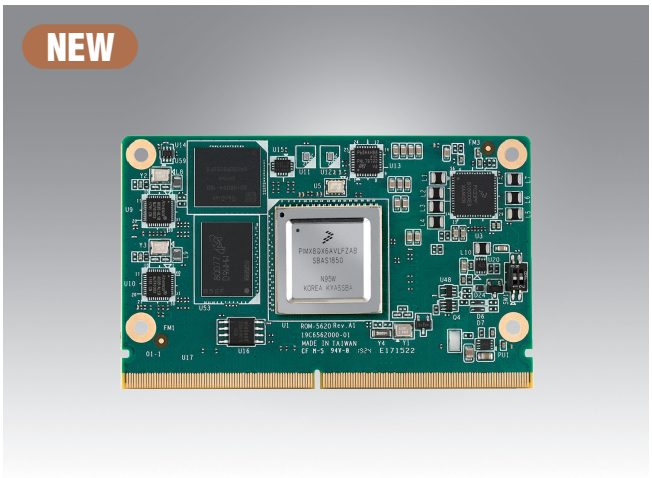

Features

- NXP i.MX 8X processor with 2-4 x Arm Cortex-A35 cores
- 1 x Arm Cortex-M4F core and 1x Tensilica® HiFi 4 DSP
- Onboard 2GB LPDDR4 memory and eMMC 16GB
- 2 x single channel LVDS or 2 x 4-LANE MIPI DSI
- 1 x USB 3.0, 1 x USB 2.0 Host, 1 x USB2.0 OTG, 2 x CAN, 3 x UART, 4 x I2C, 12 x GPIO, 1 x PCIe 3.0, 1 x 4-lane MIPI CSI camera input and 2 x Gigabit LAN
- Supports OpenGL 3.0/2.1 ; OpenGL ES 3.1/3.0/2.0/1.1 and OpenCL 2.0 hardware accelerators
- Supports 4K hardware decode engine
- Low power consumption desgin
- Supports Linux and Android BSP

Introduction

Advantech ROM-5620 SMARC2.0/2.1 Computer-on-Module is powered by NXP i.MX 8X SoC which includes two to four Arm Cortex-A35 cores for mid-range automotive and industrial market segments, one Cortex-M4F core for real-time processing, and one Tensilica Hi-Fi 4 DSP for efficient audio and voice codec execution. It also escalates its graphic performance by Vivante GC7000 Lite, 4K H.265 capable decoder, and dual 1080P60 display controller.

ROM-5620 is paired with Advantech ROM-DB5901 Evaluation Carrier Board for faster end product peripheral integration and time-to-market. The reference schematics and layout checklists documentations for carrier board development will be provided along with the open-sourced Linux BSP, test utilities, hardware design utilities and reference drivers.

Specifications

Form Factor		SMARC2.0 & SMARC2.1 compliance
Processor System	CPU	NXP i.MX 8DualXPlus (2 x Arm Cortex-A35) or 8QuadXPlus (4 x Arm Cortex-A35) 1.2GHz
	MCU	1 x Arm Cortex-M4F core
	DSP	1 x Tensilica® HiFi 4 DSP
Memory	Technology	LPDDR4 2400 MT/s
	Capacity	Onboard 2GB LPDDR4
	Flash	16 GB eMMC NAND Flash for O.S. and 8 MB QSPI NOR Flash for board information
Graphics	LVDS/MIPI DSI	2 x 24-bit single channel LVDS 1080p or 2 x 4-LANE MIPI DSI
	HDMI	-
	Parallel RGB	-
	VGA	-
	Graphics Engine	Vivante GC7000 Lite
	H/W Video Codec	Supports H.265/H.264(4Kp30), WMV9/VC-1 imple, MPEG-1, MPEG-2, AVS, MPEG4.2 ASP, H.263 decode and H.264(1080p30) encode
Ethernet	Chipset	2 x NXP i.MX8X integrated RGMII
	Speed	2 x 10/100/1000 Mbps
RTC	RTC	Yes
WatchDog Timer		1~6553s, default 60s, power on/off 1s
Security		TPM 2.0
I/O	PCIe	1 x PCIe 3.0
	SATA	-
	USB	1 x USB 3.0, 1 USB 2.0 Host, 1 USB 2.0 OTG
	Audio	2 x I²S
	SPDIF	-
	SDIO	1
	Serial Port	1 x 4-wire UART and 2 x 2-wire UART
	SPI	2
	CAN	2 x CAN bus 2.0 A/B
	GPIO	12
	I²C	4 with interrupt
	Camera Input	1 x 4-lane MIPI CSI-2
	System Bus	-
	Touch	-
	Keypad	-
Power	Power Supply Voltage	4.75~5.25V
	Power Consumption	3.832W (Max)
Environment	Operating Temperature	0 ~ 60 °C/ -40 ~ 85 °C
	Operating Humidity	5 ~ 95% relative humidity, non-condensing
Mechanical	Dimensions (W x D)	82 x 50 mm
Operation System		Linux & Android
Certifications		CE/FCC Class B

昱电 研伟科技 15323776600

Block Diagram

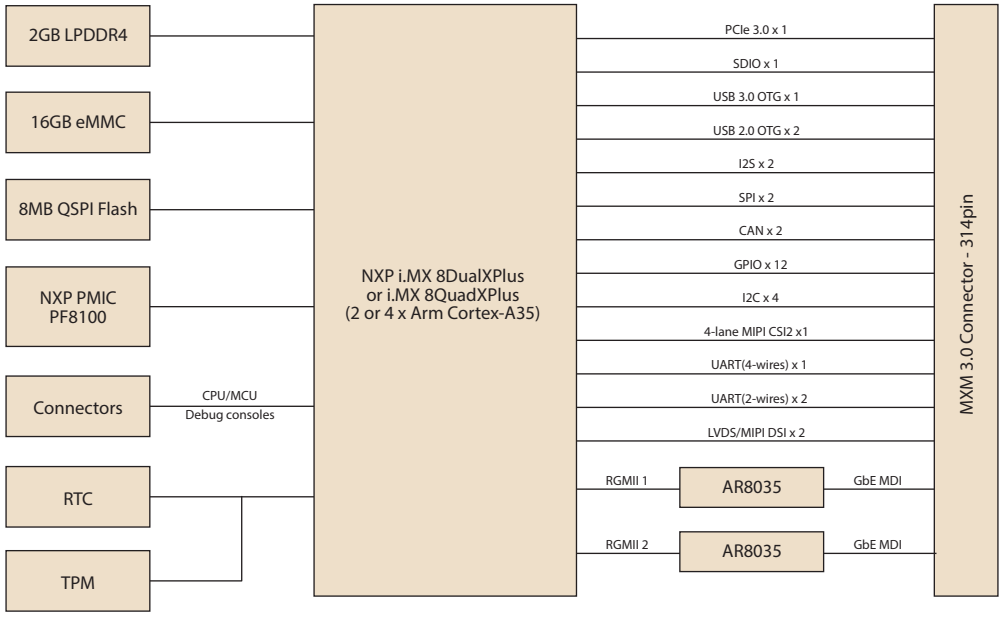

Ordering Information

Part No.	CPU	Memory	Flash Memory	UART	LAN	USB 3.0	USB 2.0	Display	PCIe 3.0	SD	CANbus	I²C	SPI	Size	Power input	Operating Temperature
ROM-5620CE-0EA1E	i.MX 8DualXPlus	2 GB	16 GB	3	2	1	2	2x single channel 24-bit, 1x dual channel 48-bit LVDS or 2x 4-Lane MIPI-DSI by S/W Configuration	1	1	2	4	2	82 x 50 mm	4.75 ~ 5.25V	0 ~ 60 °C
ROM-5620WE-0EA1E	i.MX 8DualXPlus	2 GB	16 GB	3	2	1	2		1	1	2	4	2	82 x 50 mm	4.75 ~ 5.25V	-40 ~ 85 °C
ROM-5620CU-0EA1E	i.MX 8QuadXPlus	2 GB	16 GB	3	2	1	2		1	1	2	4	2	82 x 50 mm	4.75 ~ 5.25V	0 ~ 60 °C
ROM-5620WU-0EA1E	i.MX 8QuadXPlus	2 GB	16 GB	3	2	1	2		1	1	2	4	2	82 x 50 mm	4.75 ~ 5.25V	-40 ~ 85 °C

Development Board

Part No.	Description
ROM-DB5901-SWA1	Development board for SMARC v2.0 Arm-based Module series

Optional Accessories

Part No.	Description
1701100300	Debug port cable for ROM-5620
1700019474	D-SUB 9P(F)/D-SUB 9P(F) RS232/RS485 100c
1970004483T001	Heat Spreader for -40~85°C
1960063089N001	Semi Heat Sink for -40~85°C
193B021490	Screw for Heat Spreader and Semi Heat Sink
96PSA-A36W12R1-3	ADAPTER 100-240V 36W 12V 3A
1700001524	Power Cord 3P UL 10A 125V 180cm
170203183C	Power Cord 3P Europe (WS-010+WS-083) 183cm
170203180A	Power Cord 3P UK 2.5A/3A 250V 1.83M
1700008921	Power Cord 3P PSE 183cm
SQF-ISDM1-16G-21C	SQF SD Card I-SD UHS-I MLC 16G (0~70°C)
SQF-ISDM1-16G-21E	SQF I-SD UHS-I MLC 16G (-40~85°C)
EWM-W163M201E	802.11 a/b/g/n/ac,QCA6174A,2T2R,w/BT4.1,M.2 2230
1750008717-01	Dipole Ant. D.B 2.4/5G WIFI 3dBi SMA/M-R BLK
1750007965-01	Antenna Cable R/P SMA (M) to MHF4, 300mm
EWM-C117FL06E*	LTE 4G,3G WCDMA/DC-HSPA+, 2G module, MPCI-L280H
1750007990-01	Antenna 4G/LTE full band L=11 cm 50 Ohm
1750006009	Antenna Cable SMA (F) to MHF 1.32 25cm

*Please contact us for suggesting suitable cellular module for your region.

Dimensions

Unit: mm

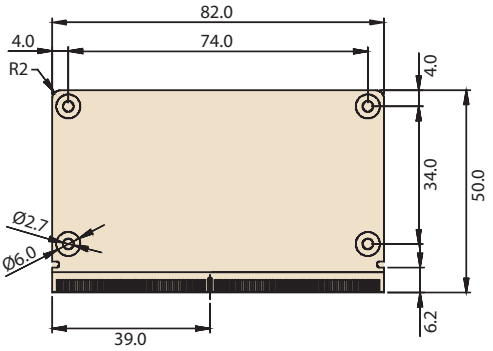

Embedded Linux Support and Design-in Services

Hardware Certified Ubuntu and Yocto with Eco Partner Services

Linux is the most popular embedded OS for transportation, outdoor services, factory automation, and mission critical applications. Its open source and kernel reliability features ease security updates, and make it particularly adaptable to new AI and Edge computing technology. Advantech has cooperated with Canonical and other software partners to provide hardware certified Ubuntu image and Yocto BSP as Linux offerings. The Advantech, Embedded Linux, and Android Alliance (ELAA) delivers local software services and consultation.

Features

Certified OS and BSP	Licensed Services	Numerous AI and Edge Resources	Local Partner Alliance
• Platform compatibility tests • Preloaded functional driver and software stacks	• License authorized Canonical delivers 10-years of bug fixes and security updates • In-house bundled service	• Containerized technology for service provision and deployment • AI resources from Caffe, TensorFlow, and mxnet	• Embedded Linux and Android Alliance (ELAA)

WISE-DeviceOn

Massive IoT Device Management Utility

IoT deployment and management typically involves numerous disparate devices installed on multiple sites. These devices require effective monitoring, managing, and tracking. Advantech's easy-to-use WISE-DeviceOn interface enables users to remotely monitor device health, troubleshoot problems, and send software/firmware updates over-the-air (OTA). In sum, DeviceOn empowers quick real-time responsiveness to emerging problems.

Features

Comprehensive Management	Remote Access	Efficient Operations
• Devices status • Peripherals/firmware • Open for extension	• Real-time monitoring • Remote controls • Troubleshooting	• Zero-touch on-boarding • OTA updates • Batch control

Product Highlights

SOM-6883
High-performance 11th Gen Intel® COMe Type 6 Module

MIO-5375
Compact 11th Gen Intel® Outdoor Focused 3.5" SBC

EPC-B5587
10th Gen Intel® Xeon® based Edge server

EPC-R3220
Arm based IoT Edge Gateway