ROM-3420

NXP ARM® Cortex®-A9 i.MX6 RTX v2.0 module

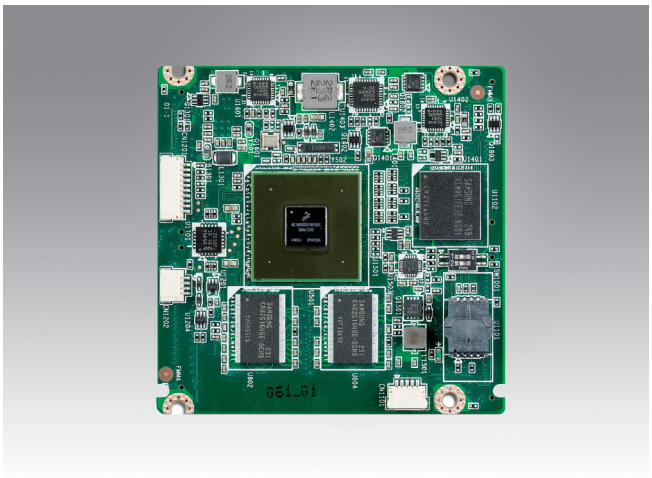

Features

- NXP ARM® Cortex®-A9 i.MX6 high performance processor
- Onbard DDR3 memory and eMMC 4GB
- Supports wide range power input 5V~24V
- Supports OpenGL ES 2.0 and OpenVG 1.1 hardware accelerators
- Supports full HD 1080p video decode and HD 1080p video encode hardware engine
- Supports 1 PCIe, 1 GbE, 1 USB 2.0, 1 USB OTG2.0, 1 SATAII, 4 I²C, 1 I²S, 1 Camera in, 2 CANbus, 10 GPIO, System bus
- Low power consumption, fanless desgin
- Supports Linux and Android BSP

Introduction

ROM-3420 RTX2.0 module integrates an ARM Cortex A9 Dual 1 GHz NXP i.MX6 series ultra low power SoC and I/O solution with Linux. NXP i.MX6 supports 2D, 3D graphics acceleration, and a full HD 1080P video decoding encoding hardware engine. ROM-3420 supports 5V~24V wide range power inputs and a wide temperature design for industrial applications.

ROM-3420 RTX2.0 module offers an Advantech ROM-DB3900 evaluation carrier board for easy integration and hardware design reference, and also provides a Linux BSP utility and reference codes for application development and device integration.

Specifications

Form Factor		RTX v2.0
Processor System	CPU	NXP ARM Cortex-A9 i.MX6 1 GHz
Memory	Technology	DDR3 1066 MHz
	Capacity	On-board DDR3 1 GB
	Flash	4 GB eMMC NAND Flash for O.S. and 4 MB SPI NOR Flash for Advantech boot loader
Graphics	LVDS	1 Single 24-bit LVDS, 1366 x 768 at 60Hz
	HDMI	1920 x 1080 at 60Hz
	Parallel RGB	1 24-bit TTL, 1920 x 1200 at 60Hz
	VGA	-
	Graphics Engine	2 IPUs. OpenGL ES 2.0 for 3D, BitBlt for 2D and OpenVG 1.1
	H/W Video Codec	Decoder: MPEG-4 ASP, H.264 HP, H.263, MPEG-2 MP, MJPEG BP Encoder: MPEG-4 SP, H.264 BP, H.263, MJPEG BP
Ethernet	Chipset	NXP i.MX6 integrated RGMII
	Speed	1 x 10/100/1000 Mbps
RTC	RTC	Yes
WatchDog Timer		256-level timer interval, from 0 ~ 128 sec
I/O	PCIe	1 PCIe x 1
	SATA	1 SATA II
	USB	1 USB 2.0, 1 USB 2.0 OTG
	Audio	I²S
	SPDIF	-
	SDIO	1
	Serial Port	3 UART (3 x 4 wire w / 3.3V)
	SPI	2
	CAN	2 CAN bus 2.0B
	GPIO	10
	I²C	4
	Camera Input	1 MIPI v1.0, 4 x Lane
	System Bus	Address: 26 bits, Data: 16 bits
	Touch	-
	Keypad	-
Power	Power Supply Voltage	5 ~ 24 V
	Power Consumption	6.25W (Max)
Environment	Operating Temperature	0 ~ 60 °C/ -40 ~ 85 °C
	Operating Humidity	0% ~ 90% relative humidity, non-condensing
Mechanical	Dimensions (W x D)	68 x 68 mm
Operation system		Linux & Android
Certifications		CE/FCC Class B

研伟科技 15323776600

Block Diagram

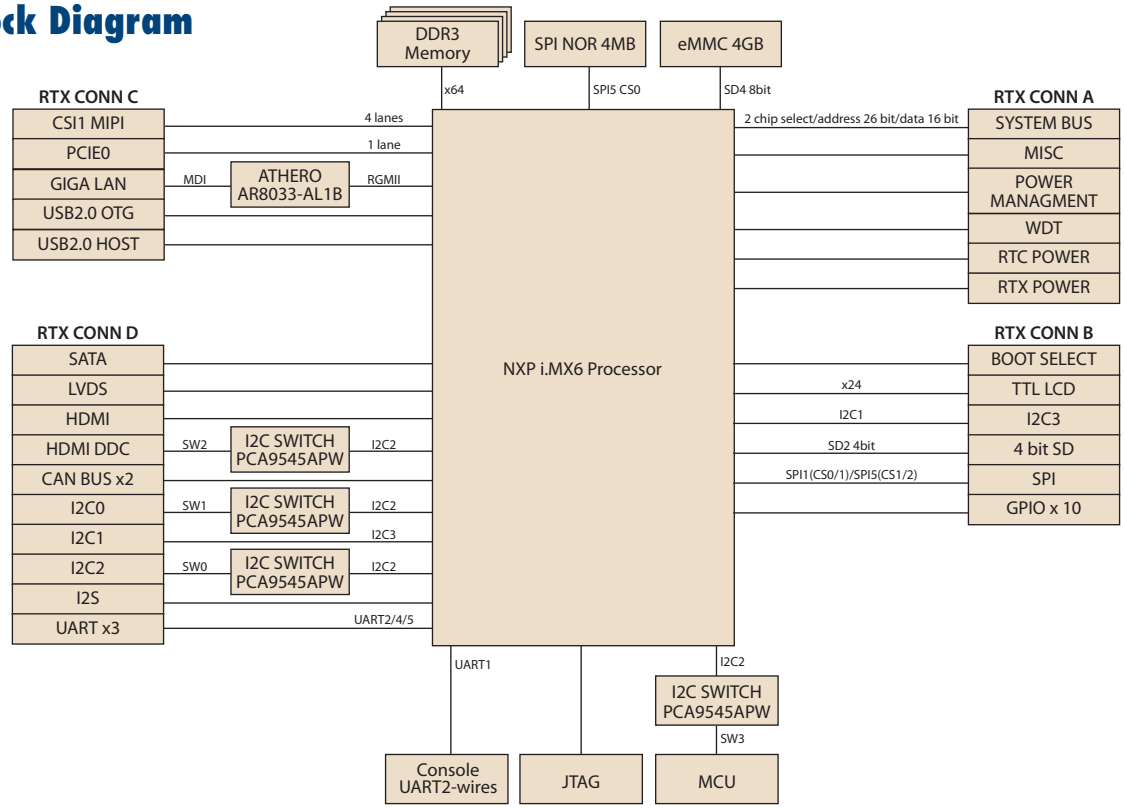

Ordering Information

Part No.	CPU	Memory	Flash Memory	UART	LAN	USB Host	USB OTG	Display	SATA	PCIe	HDMI	SD	CANbus	I²C	SPI	Size	Power input	Operating Temperature
ROM-3420CD-MDA1E	i.MX6 Dual 1GHz	1 GB	4 GB	3	1	1	1	1 x 24bit LVDS 1 x 24bit TTL 1 x HDMI	1	1	1	1	2	4	2	68 x 68 x 7 mm	5 V ~ 24 V	0 ~ 60 °C
ROM-3420WD-MDA1E	i.MX6 Dual 1GHz	1 GB	4 GB	3	1	1	1	1 x 24bit LVDS 1 x 24bit TTL 1 x HDMI	1	1	1	1	2	4	2	68 x 68 x 7 mm	5 V ~ 24 V	-40 ~ 85 °C

Development Board

Part No.	Description
ROM-DB3900-SWA1E	Development board for RTX2.0 module
ROM-DK3420-F0A1E	ROM-3420 EVK Kit (RTX v2.0)

Optional Accessories

Part No.	Description
1700022373-01	Debug port cable for ROM-3420/5420
9696ED2000E	Debug adapter board
1960065189N001	Semi-Heatsink for ROM-3420
1930004835	Screws for heatsink
96PSA-A36W12R1-3	ADAPTER 100-240V 36W 12V 3A
1700001524	Power cord 3P UL 10A 125V 180cm
170203183C	Power cord 3P Europe (WS-010+WS-083)183cm
1700008921	Power cord 3P PSE 183cm
170203180A	Power cord 3P UK 2.5A/3A 250V 1.83M
1700019146	Power Cord CCC 3P 10A 250V 183cm
SQF-ISDM1-16G-21C	SQ Flash SD card UHS-I MLC 16GB (0 ~ 70 °C)
SQF-ISDM1-16G-21E	SQ Flash SD card UHS-I MLC 16GB (-40 ~ 85 °C)
EWM-W188M201E	WiFi 802.11ac/abgn 2T2R and BT4.2
1750008671-01	Dipole Ant.SMA/M-R 2.4/5G 2.5/4dBi BLK 109mm
1750007965-01	Antenna cable, SMA (M) to MHF4, 300mm
EWM-C117FL06E*	LTE 4G,3G WCDMA/DC-HSPA+, 2G module, MPCI-L280H
1750008303-01	Antenna AN0727-64SP6BSM
1750006009	Antenna Cable SMA (F) to MHF 1.32 25cm

* Please contact us to get suitable cellular module for your region.

Dimensions

Unit: mm

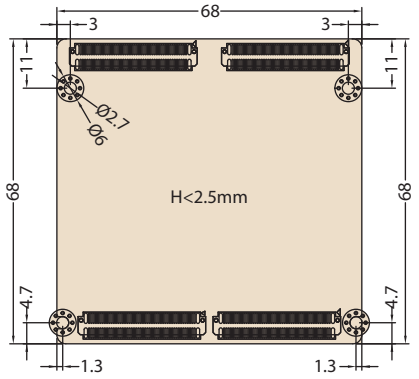

Embedded Linux Support and Design-in Services

Hardware Certified Ubuntu and Yocto with Eco Partner Services

Linux is the most popular embedded OS for transportation, outdoor services, factory automation, and mission critical applications. Its open source and kernel reliability features ease security updates, and make it particularly adaptable to new AI and Edge computing technology. Advantech has cooperated with Canonical and other software partners to provide hardware certified Ubuntu image and Yocto BSP as Linux offerings. The Advantech, Embedded Linux, and Android Alliance (ELAA) delivers local software services and consultation.

Features

Certified OS and BSP	Licensed Services	Numerous AI and Edge Resources	Local Partner Alliance
• Platform compatibility tests • Preloaded functional driver and software stacks	• License authorized Canonical delivers 10-years of bug fixes and security updates • In-house bundled service	• Containerized technology for service provision and deployment • AI resources from Caffe, TensorFlow, and mxnet	• Embedded Linux and Android Alliance (ELAA)

WISE-DeviceOn

Massive IoT Device Management Utility

IoT deployment and management typically involves numerous disparate devices installed on multiple sites. These devices require effective monitoring, managing, and tracking. Advantech's easy-to-use WISE-DeviceOn interface enables users to remotely monitor device health, troubleshoot problems, and send software/firmware updates over-the-air (OTA). In sum, DeviceOn empowers quick real-time responsiveness to emerging problems.

Features

Comprehensive Management	Remote Access	Efficient Operations
• Devices status • Peripherals/firmware • Open for extension	• Real-time monitoring • Remote controls • Troubleshooting	• Zero-touch on-boarding • OTA updates • Batch control

Product Highlights

SOM-6883
High-performance 11th Gen Intel® COMe Type 6 Module

MIO-5375
Compact 11th Gen Intel® Outdoor Focused 3.5" SBC

EPC-B5587
10th Gen Intel® Xeon® based Edge server

EPC-R3220
Arm based IoT Edge Gateway