AIMB-U233

Intel 8th Gen U Series CORE i3/i5/i7 CPU, eDP (LVDS), 2 HDMI, 2 LAN, 2 USB3.2 Gen2 x1, 4 COM (RS-232/422/485), M.2 E-Key, M.2 B-Key, M.2 M-Key NVMe

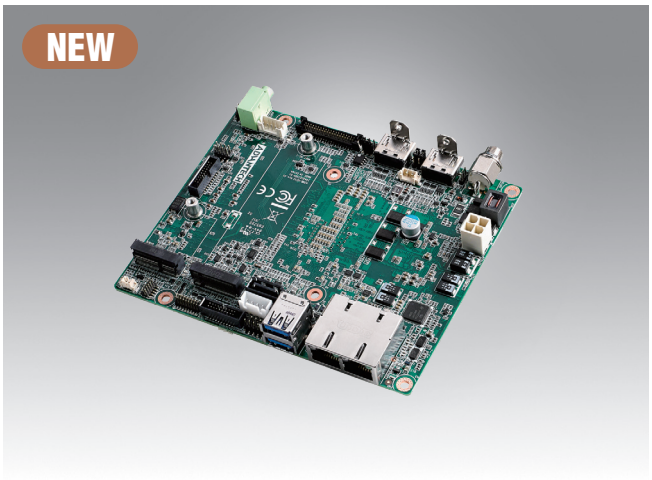

Features

- Intel® 8th Gen Core™ i3-8145UE / i5-8365UE / i7-8665UE
- Supports 1 x DDR4-2400 SO-DIMM
- Supports 1 x eDP (LVDS co-lay), 2 x HDMI, 3 Independent Displays
- Supports 2 x LAN, 2 x USB3.2 Gen2 x1 Type-A Ports, 4 COM Ports (RS-232/422/485, selected via BIOS)
- Supports 1 x M.2 E-Key, 1 x M.2 B-Key, 1 x M.2 M-Key NVMe
- Supports Intel vPro (For i5 and i7 CPU)
- Supports RAID 0/1/5

ubuntu® Windows 10 CE FCC RoHS

Specifications

Processor System	CPU (14 NM)	Intel® Core™ i3-8145UE	Intel® Core™ i5-8365UE	Intel® Core™ i7-8665UE
	Max. Speed	2C/4T, 2.2/3.9 (Base/Turbo) GHz	4C/8T, 1.6/4.1 (Base/Turbo) GHz	4C/8T, 1.7/4.4 (Base/Turbo) GHz
	Cache Memory	4MB	6MB	8MB
	BIOS	256Mb SPI AMI BIOS		
Expansion Slot	M.2	1, M-Key 2280 (PCIe x4, SATA co-layout) 1, B-Key 2242/ 3042 (PCIe x2, USB 2.0, SATA co-layout) 1, E-Key 2230 (PCIe x2, USB 2.0 co-layout)		
Memory	Technology	DDR4-2400 (Non-ECC)		
	Max. Capacity	16 GB		
	Socket	1 260-Pin SODIMM		
Graphic	Controller	Intel® UHD Graphics 620		
	HDMI	2, Supports max resolution: 3840 x 2160 @ 30Hz		
	eDP	1, Supports max resolution: 4096 x 2304 @ 60Hz		
	LVDS	1, Supports max resolution: 1920 x 1200 @ 60Hz		
Ethernet	Interface	10/100/1000 Mbps		
	Controller	LAN1: Intel Jacksonville: I219LM GbE PHY LAN 2: Intel Springville: I211AT GbE		
	Connector	2, RJ45		
SATA	Max Data Transfer Rate	600 MB/s (SATA 3.0)		
	Connector	1		
External I/O	HDMI	2		
	USB	2, USB3.2 Gen2 x1 Type-A		
	Ethernet	2 GbE		
	Audio	1		
	DC Jack	1, 12V DC-In		
Internal Connector	eDP or LVDS (BOM option) / Inverter	1/1		
	Serial	2, RS-232 2, RS-232/422/485 (Selected in BIOS)		
	SATA	1, (SATA 3.0) SATA connector & PWR connector		
	USB	USB2.0 x 2 connector		
	16-bit GPIO 1	1		
Watchdog Timer	Output	System reset		
	Interval	Programmable 1 ~ 255 sec/min		
Power	Single Voltage 1	12V DC-In (1 external DC Jack)		
	Typical Power Consumption	Typical: 6.25W @12V Max: 22.97W @12V		
Environment		Operating: 0 ~ 60 °C Non-Operating: -40 85 °C		
Physical Characteristics	Dimensions	112 x 137 mm (4.4" x 5.4")		

研伟科技 15323776600

Block Diagram

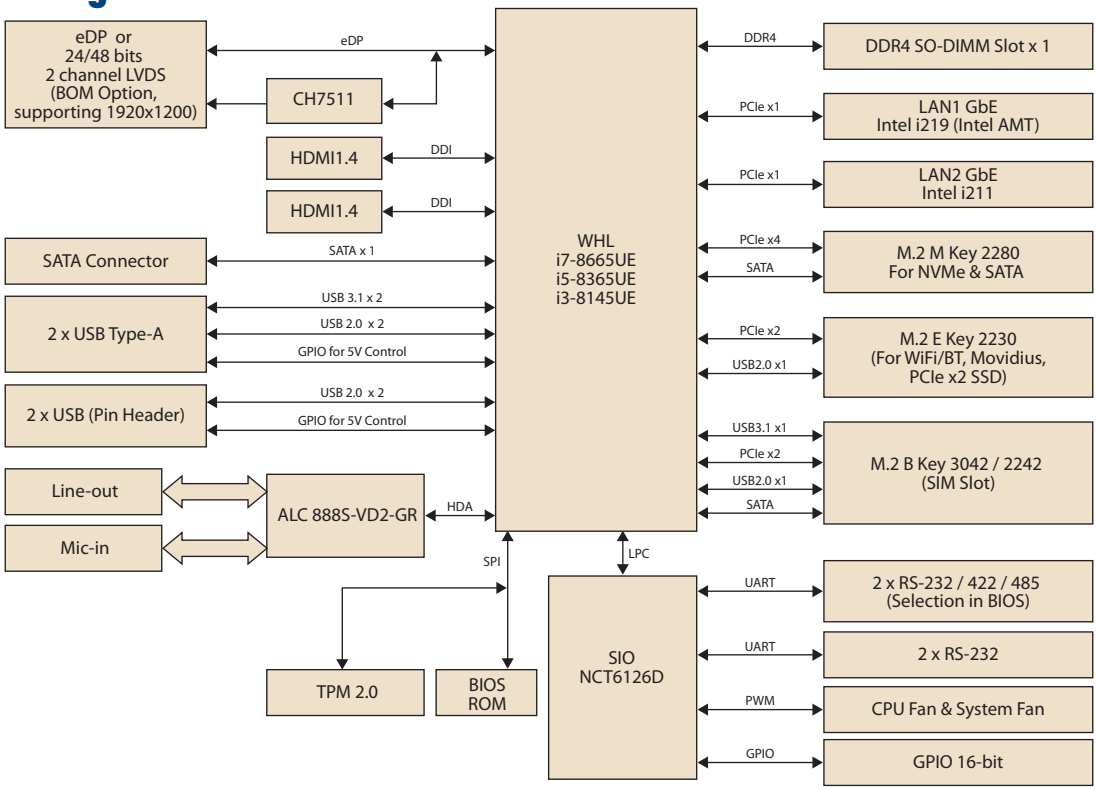

Ordering Information

P/N	CPU	SODIMM	HDMI 1.4b	eDP/ LVDS	GbE LAN	SATA	RS232	RS232/422/485	USB3.2 Gen2 x1	USB2.0	M.2 M-Key	M.2 B-Key	M.2 E-Key	TPM 2.0
AIMB-U233E-U7A1E	i7-8665UE	1	2	1/(1)	2	1	2	2	2	2	1	1	1	1
AIMB-U233E-U5A1E	i5-8365UE	1	2	1/(1)	2	1	2	2	2	2	1	1	1	1
AIMB-U233E-U3A1E	i3-8145UE	1	2	1/(1)	2	1	2	2	2	2	1	1	1	1
AIMB-U233L-U3A1E	i3-8145UE	1	2	(1)/1	2	1	2	2	2	2	1	1	1	1

Packing List

Part Number	Description	Quantity
1700029129-01	F Cable IDE#2 18P-1.27/D-SUB 9P(F)*2 20CM (GPIO cable)	1
1700031130-01	F cable IDE#2 20P-1.27/D-SUB 9P(M)*2 20cm (COM cable)	2
1930006770-01	Screw M2.5*4L F/S D=4.5 H=0.8 + ST Ni NK	3
1970004550N001	C.L R3 I-WSL U15W 70x54x27.5mm AIMB-U233 (CPU Cooler On-board)	1

Optional Accessories

Part Number	Description
1970004549N001	H.S. R2 I-WSL U15W 117x112x18.76mm AIMB-U233 (Motherboard Heatsink)
1700031306-01	A cable USB-A 4P(F)*2/2*5P-2.0 15cm (USB cable)
1700008941	M Cable SATA 7P/SATA 7P 32CM C=R 180/180D W/Lock (SATA signal cable)
1700018785	A CABLE SATA 15P/1*4P-2.5 35cm for AIMB-213 (SATA power cable)

CPU Cooler (Default)

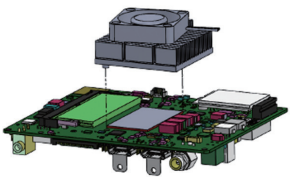

Motherboard Heatsink (Option)

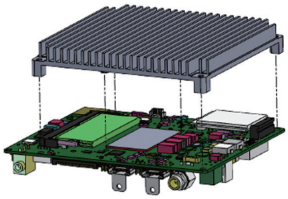

Embedded OS / API

OS / API	Part Number	Available CPU SKU(s)	Description
Windows10	20706WX9VS0090	Core i5, Core i3	img W10 19VL AIMB-U233 64b 1809 ENU
Windows10	20706WX9HS0086	Core i7	img W10 19HL AIMB-U233 64b 1809 ENU
Linux Ubuntu	36OSU233000101	All CPU SKUs	Ubuntu V20.04 image of AIMB-U233