AIMB-231

Intel® Core™ i7-5650U/i5-5350U/i3-5010U/ Celeron 3765U Mini-ITX with LVDS(eDP)/ DP(HDMI)/DP++, 2 COM, and Dual LAN

Windows Embedded SUSIAccess RoHS COMPLIANT 2002/95/EC CE FCC

Features

- Intel® Core™ i7-5650U/ i5-5350U/i3-5010U/ celeron 3765U processor, 15W TDP, BGA 1168 (MCP) 14nm Processor
- Two 204-pin SO-DIMM up to 16 GB DDR3L 1600 MHz SDRAM
- Multiple display I/O supports versatile Tri display functions for eDP/LVDS, DP/HDMI, and DP++
- Realtek ALC892 supports 7.1 + 2 channel HD audio
- Dual Intel i218/i210 Gigabit LAN
- 1 Full-sized Mini-PCIe, 1 Half-sized Mini-PCIe,1 SIM Card Holder
- 2 COM, 3 SATA III, 1 mSATA
- 4 USB 3.0, 2 USB 2.0

Software APIs: SMBus, H/W Monitor, Watchdog, GPIO, Brightness

Utilities: BIOS flash, Monitoring

Specifications

Processor System	CPU	Intel Core i7-5650U	Intel Core i5-5350U	Intel Core i3-5010U	Intel Celeron 3765U
	Core Number	2	2	2	2
	Max. Speed	3.1GHz	1.8 GHz	2.1GHz	1.9GHz
	L3 Cache	4MB	3M	3M	2M
	Chipset	5th Generation Intel® CoreTM ULT + Wildcat Point LP			
	BIOS	AMI EFI 128 Mbit, SPI			
Expansion Slot	Full-size Mini-PCIe	1, Supports 1 x USB 2.0 and co-lay 1 x mSATA with SIM card holder			
	Half-size Mini-PCIe	1, Supports 1 x USB 2.0			
Memory	Technology	Dual Channel DDR3L 1600 MHz			
	Max. Capacity	16 GB/8 GB per SO-DIMM			
	Socket	2 x 204-pin SO-DIMM (Non-ECC)			
Graphics	Controller	Intel® HD Graphics 6000 Supports DirectX 11.1, OpenGL 4.2, OpenCL 1.3, Full AVC, VC1, MPEG2 H/W encoder		Intel® HD Graphics 5500	
	LVDS+Inverter / eDP	Supports dual channel 48-bit up to 1920 x 1200, co-lay eDP			
	DP/HDMI	1, Supports HDMI 1.4 for HD Video playback Max resolution up to 3840 x 2160 at 60 Hz on DisplayPort, 4096 x 2304 at 24 Hz on HDMI (default HDMI)			
	DP++	1, DP++ connector, available with DP-to-DVI (HDMI) cable (no transmitter) to connector to normal LCD monitor			
	Dual Display	LVDS(or eDP)+DP, LVDS(or eDP)+HDMI, LVDS(or eDP)+DP++, DP +DP++, HDMI+ DP++			
	Tri Display	DP++ + HDMI +LVDS(or eDP), DP++ + DP +LVDS(or eDP)			
	Dual Display Mode	Extended Mode, Clone Mode			
Ethernet	Interface	10/100/1000 Mbps			
	Controller	LAN1: Intel PHY i218-LM (support AMT 10.0) LAN2: Intel i210			
	Connector	RJ-45 x 2			
SATA	Max Data Transfer Rate	600 MB/s (SATA 3.0)/ mSATA			
	Channel	3 / 1			
	S/W RAID	0, 1, 5			
Rear I/O	DP/HDMI	1 / 1			
	DP++	1			
	Ethernet	2			
	USB	4 x USB 3.0			
	Audio	2 single audio jack for Line-Out (Green), Mic-In (Red)			
	DC Jack	DC 12V Jack, single power			
Internal Connector	LVDS & Inverter	1			
	eDP	1, by BOM optional			
	LVDS Inverter	1 (5 pin support 5V and 12V)			
	LVDS Connector	1 (3.3V / 5V / 12V) by jumper selected			
	USB	2 ports USB 2.0 with 2.0mm pin-header			
	Serial	COM 1: RS-232/422/485 supports +5V, +12V(without H/W auto flow control) COM 2: RS-232			
	SATA	4 (3 x SATA 3.0, 1 x mSATA)			
	SATA Power	3			
	PS/2 K/B & M/S	Supports PS/2 K/S,M/S with 5-pin wafer			
	CPU/System/Chassis Fan Connector	1 CPU fan with 4-pin wafter 1 System fan with 4-pin wafter			
	Power Connector	4-pin ATX, DC12V			
	GPIO	8-bit (4-bit DI and 4-bit DO)			
Watchdog Timer	Output	System reset			
	Interval	Programmable 1 ~ 255 sec/min			
Power Requirement	Power Type	Single voltage 12 V DC input;1 x External DC jack;1 x Internal 4-pin (2 x 2) power connector, Supports AT/ATX mode			
	Power Consumption (Max, test in HCT)	i5-5350U,3.5" SATA HDD x1+ 8G RAM x 2 12V 5.57(A)		i3-5010U,3.5" SATA HDD x1+ 8G RAM x 2 12V 3.05(A)	
Environment	Temperature	Operating		Non-Operating	
		0 ~ 60° C (32 ~ 140° F), depends on CPU speed and cooler solution		-40 ~ 85° C (-40 ~ 185° F)	
Physical Characteristics	Dimensions	170 x 170 mm (6.69" x 6.69")			

昊岩研伟科技 15323776600

Block Diagram

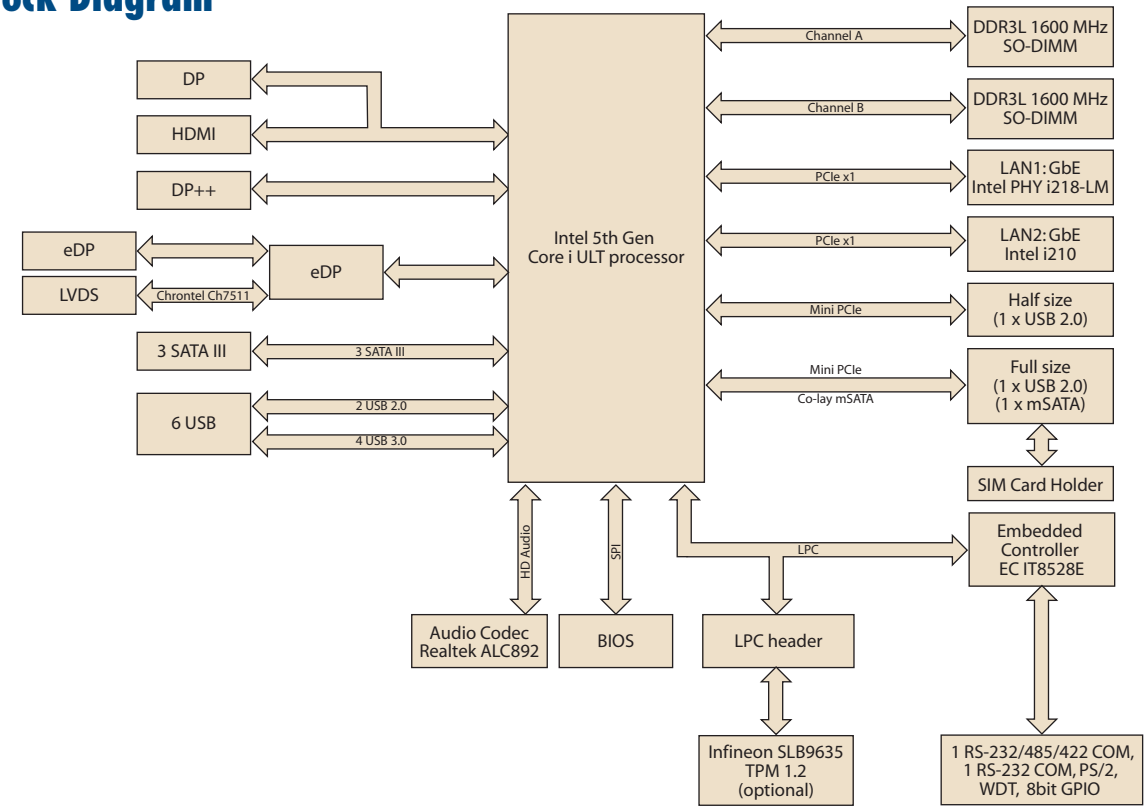

Ordering Information

Order Number	CPU	Display	GbE	TPM	Storage	USB	PCIe / PCI	AMP	Operating Temp.
AIMB-231G2-U7A1E	i7-5650U	DP/HDMI, DP++, LVDS/eDP	2	(1)	3 x SATA III 1 x mSATA	4 x USB 3.0 2 x USB 2.0	1 x Full-size Mini-PCIe 1 x Half-size Mini-PCIe	(1)	0 ~ 60° C
AIMB-231G2-U5A1E	i5-5350U								0 ~ 60° C
AIMB-231G2-U3A1E	i3-5010U								0 ~ 60° C
AIMB-231G2-U0A1E	Celeron 3765U								0 ~ 60° C
AIMB-231G2Z-U3A1E	i3-5010U								-20 ~ 70° C

*() BOM options available on MP version.

Packing List

Part Number	Description	Quantity
1700003194	SATA HDD cable	2
1700018785	SATA Power cable	2
2006A23110	Startup manual	1
1960062823N011	Fanless Heat Sink	1
19Z0000845T000	IO BRACKET FOR AIMB-231	1

Optional Accessories

Part Number	Description
96PSA-A84W12V1	ADAPTER 100-240V 84W 12V 7A
96PSA-A60W12V1-1	ADAPTER 100-240V 60W 12V 5A
1702002600	Power cable 3-pin 180 cm,USA type
1702002605	Power cable 3-pin 180 cm, Europe type
1702031801	Power cable 3-pin 180 cm, UK type
1700000237	Power cable 3-pin PSE Mark 183 cm
1960061914N021	Fan Cooler for 15W 60(W) x 60(L) x 26.5(H)mm

I/O View

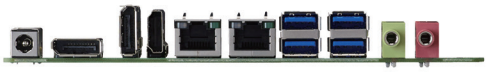

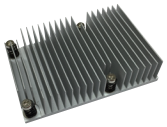

Fanless Heat Sink

Fan Cooler