AIMB-707

LGA1200 10th Generation Intel® Core™ i9/i7/i5/i3 & Pentium®/Celeron® ATX with DVI/VGA, DDR4, USB 3.2, M.2, 6 COMs

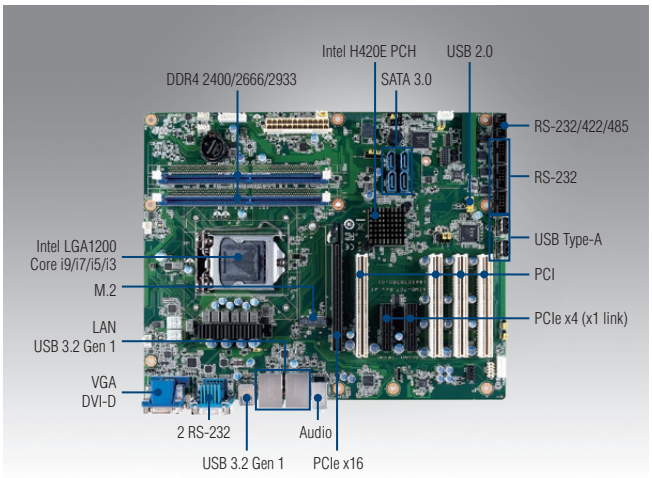

Features

- Intel® 10th generation Core™ i9/i7/i5/i3 & Pentium®/Celeron® processor with H420E chipset
- Dual channel (Non-ECC) DDR4 2400/2666/2933 up to 64 GB
- Support VGA and DVI display
- M.2, SATA 3.0, USB 3.2, dual GbEs
- 5 RS-232 and 1 RS-232/422/485 serial ports
- 1 PCIe x16 (Gen 3) and 2 PCIe x4 (x1 Gen 3 link), and 4 PCI expansion slots

Note: Legacy platform is not supported.

Quiet

Specifications

Processor System	CPU	i9-10900K	i9-10900E	i9-10900TE	i7-10700E	i7-10700TE	i5-10500E	i5-10500TE	i3-10100E	i3-10100TE	G6400E	G6400TE	G5900E	G5900TE
	Base Frequency	3.7 GHz	2.8 GHz	1.8 GHz	2.9 GHz	2.0 GHz	3.1 GHz	2.3 GHz	3.2 GHz	2.3 GHz	3.8 GHz	3.2 GHz	3.2 GHz	3.0 GHz
	L3 Cache	20 MB	20 MB	20 MB	16 MB	16 MB	12 MB	12 MB	6 MB	6 MB	4 MB	4 MB	2 MB	2 MB
	Cores	10	10	10	8	8	6	6	4	4	2	2	2	2
	TDP	125W	65 W	35 W	65 W	35 W	65 W	35 W	65 W	35 W	65 W	35 W	65 W	35 W
	Socket	LGA1200												
	Chipset	Intel H420E												
	BIOS	AMI 128Mbit SPI Flash												
Expansion Slot	PCI	4 (32-bit/33 MHz)												
	PCIe x4 (Gen 3)	2 (link x1)												
	PCIe x16 (Gen 3)	1												
Memory	Technology	Dual Channel(Non-ECC) DDR4 2400/2666/2933												
	Max Capacity	64 GB												
	Sockets	2 x 288-pin DIMM												
Graphics	Controller	Chipset integrated Intel HD Graphics												
	VRAM	Shared system memory is subject to OS												
Ethernet	Interface	10/100/1000 Mbps												
	Controller	GbE LAN1: Intel I219-V, GbE LAN2: Intel I211-AT												
	Connector	2 x RJ-45												
SATA	Max Data Transfer Rate	600 MB/s												
	Channel	4												
Rear I/O	VGA	1 (Resolution up to 1920 x 1200 @ 60 Hz)												
	DVI	1 for G2 version (Resolution up to 1920 x 1200 @ 60 Hz)												
	Ethernet	2 for G2 version; 1 for VG version												
	USB	6 (USB 3.2 Gen 1 for G2 version; 4 for VG version)												
	Audio	2 (Line-out, Mic-in)												
	Serial	2 (RS-232)												
Internal Connectors	USB	4 (2 x USB 2.0 via header, 2 x USB 2.0 Type-A) for G2 version; 3 (2 x USB 2.0 via header, 1 x USB 2.0 Type-A) for VG version												
	Serial	4 for G2 version (3 x RS-232, box-header; 1 x RS-232/422/485 with auto-flow control, box-header)												
	SATA	4												
	M.2	1 for G2 version (PCIe x2 M-key 2280 type)												
	GPIO	8-bit												
Watchdog Timer	Output	System reset												
	Interval	Programmable 1 - 255 sec												
Power Requirement	Test Environment	Intel Core i9-10900E; DDR4 32 GB x 2												
	Voltage	3.3V			5V		12V		5Vsb		-12V			
	Current	0.72A			1.29A		6.5A		0.11A		0.04A			
Environment		Operating									Non-Operating			
	Temperature	0 ~ 60 °C (32 ~ 140 °F), depends on CPU speed and system thermal solution									-40 ~ 85 °C (-40 ~ 185 °F)			
	Humidity	40 °C @ 95% RH Non-condensing									60 °C @ 95% RH Non-condensing			
Physical Characteristics	Dimensions (L x H)	304.8 x 244 mm (12" x 9.6")												

Note: A 8-pin 12V CPU power plug connected to MB's CPU 12V connector is required to support i9-10900K CPU.

昊生 研伟科技 15323776600

Block Diagram

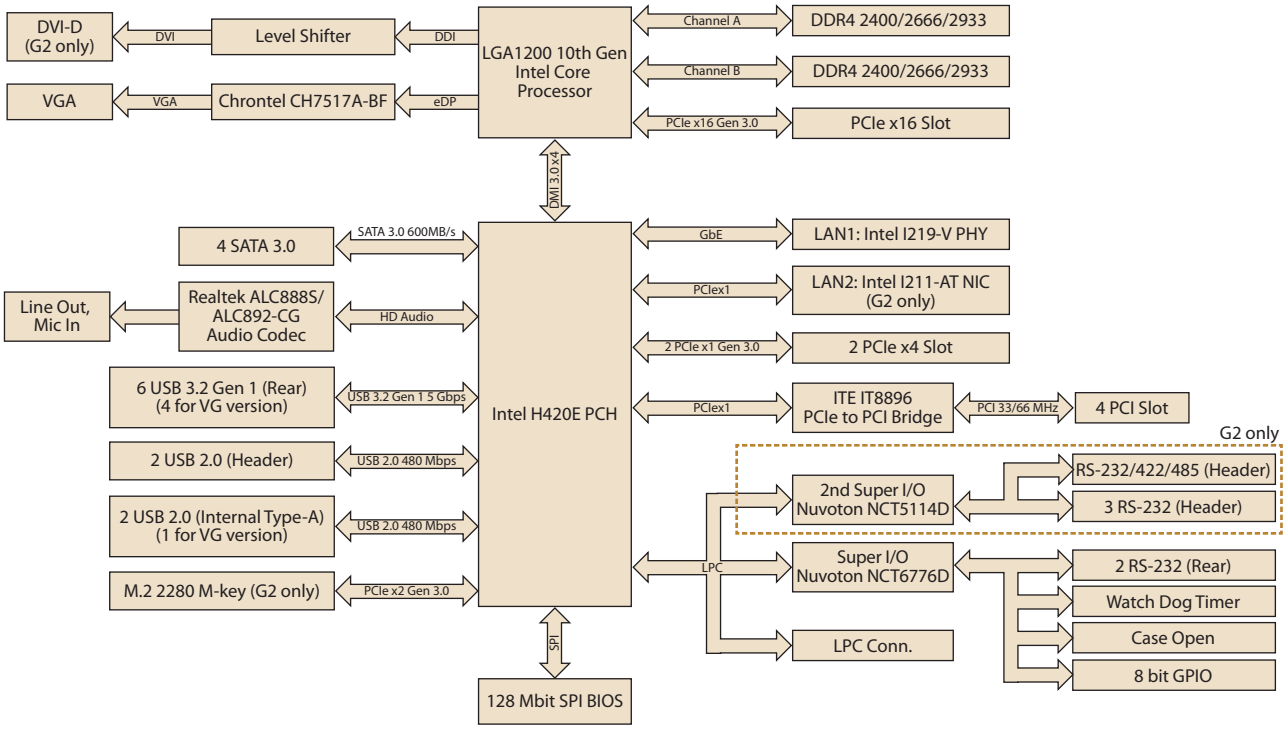

Ordering Information

Part Number	Chipset	Memory	Display	USB 3.2 Gen 1	USB 2.0	COM	GbE LAN	AMT	M.2	SATA	SW RAID	Intelligent System Module Support
AIMB-707G2-00A2	H420E	Non-ECC	VGA + DVI	6	4	6	2	No	1	4	No	No
AIMB-707VG-00A2	H420E	Non-ECC	VGA	4	3	2	1	No	0	4	No	No

Packing List

Part Number	Description	Quantity
1700003194	SATA HDD cable	x2
1960097974T001	I/O port bracket	x1
2041070700	Startup manual	x1

Note: Driver CD is not provided. Please visit Advantech support website for driver download.

I/O View

AIMB-707G2-00A2

AIMB-707VG-00A2

Optional Accessories

Part Number	Description
1701090401	Single COM port cable(40 cm)
1701092300	Dual COM port cable(28.5 cm)
1700022749-11/ 1700022749-12/ 1700022749-13	SATA power cable
1700019268-11 1960063434N000	PS/2 KB/Mouse cable IO bracket for PS/2 KB/Mouse cable
1700002204	2-port USB 2.0 cable w/ BKT(27 cm)
1960052651N021	CPU cooler for 2U, 4U, and wallmount chassis (for CPU TDP=35~65W)
1960067860N001	CPU cooler for 4U chassis (for CPU TDP=95~125W)
1960049408N001	CPU heatsink for 1U chassis
1960102528N001	IO bracket for G2 sku on ACP-1010 chassis only
1960102528N011	IO bracket for VG sku on ACP-1010 chassis only
PCA-COM232-00A1E	4-port RS-232 LPC module
PCA-COM485-00A1E	4-port RS-422/485 LPC module
PCA-TPM-00B1E	TPM2.0 module

Note 1: Purchasing AIMB-707's proprietary CPU cooler from Advantech is a must. Other brands' CPU coolers are NOT compatible with AIMB-707.
Note 2: 1960067860N001 cooler for 95~125W CPU is tested with ACP-4000/IPC-610H chassis.

Riser Card

Part Number	Description
AIMB-RP10P-01A1E	1U riser card providing 1 PCI slot
AIMB-RF10F-01A1E	1U riser card providing 1 PCIe x 16 slot
AIMB-RP30P-03A1E	2U riser card providing 3 PCI slots
AIMB-RP3PF-21A1E	2U riser card providing 1 PCIe x 16 and 2 PCI slots